Colour Television **Chassis**

LC4.41E

AA

Service
Service
Service

For manual LGE PDP panel see: 3122 785 15590
For manual FHP PDP panel see: 3122 785 14580
For manual SDI PDP panel see: 3122 785 14990

Service Manual

Contents **Page**

1. Technical Specifications, Connections, and Chassis Overview 2
2. Safety Instructions, Warnings, and Notes 5
3. Directions for Use 6
4. Mechanical Instructions 7
5. Service Modes, Error Codes, and Fault Finding 11
6. *Block Diagrams, Test Point Overviews, and Waveforms*
   - Wiring Diagram 42” LG 19
   - Wiring Diagram 42” & 50” SDI 20
   - Block Diagram Supply FHP 21
   - Block Diagram Video 22
   - Block Diagram Audio 23
   - Test Point Overview Small Signal Board 24
   - I2C Overview 25
   - Supply Voltage Overview 26
7. PDP FHP Supply: Filter Standby (A2) 27 32-37
   - PDP FHP Supply: Protection (A3) 28 32-37
   - PDP FHP Supply: Pre Conditioner (A5) 29 32-37
   - PDP FHP Supply: LLC Supply (A6) 30 32-37
   - PDP FHP Supply: AUX Supply (A7) 31 32-37
   - SSB: Tuner and VIF (B1) 38 61-70
   - SSB: Hercules (B2) 39 61-70
   - SSB: Sync Interface (B3) 40 61-70
   - SSB: Audio Delay Line (PDP Only) (B4) 41 61-70
   - SSB: Audio Processing (B5) 42 61-70
   - SSB: DC-DC Converter (B6) 43 61-70
   - SSB: Diversity Tables B1-B6 44
   - SSB: Scaler (B7) 45 61-70
   - SSB: Scaler (B8) 46 61-70
   - SSB: Scaler Interface (B9) 47 61-70
   - SSB: SDRAM (B10) 48 61-70
   - SSB: Flash / Control (B11) 49 61-70
   - SSB: HDMI (B12) 50 61-70
   - SSB: MUX-Sync Interface (B13) 51 61-70
   - SSB: Digital I/O (B14) 52 61-70
   - SSB: SCART Analog I/O (B15A) 53 61-70
   - SSB: DMMI (B15B) 54 61-70
   - SSB: Top Connectors (B16) 55 61-70
   - SSB: Side Connectors (B17) 56 61-70
   - SSB: ADC (B18) 57 61-70
   - SSB: Columbus (B19) 58 61-70
   - SSB: Pacific 3 (B20) 59 61-70
   - SSB: Diversity Tables B9-B20 60
   - Audio Panel: Amplifier (C) 71 73
   - Side I/O Panel (D) 74 75
   - Keyboard Control Board (E) 76 76
   - Front IR / LED Panel (J) 77 78
   - OTC Flash (For 1000pg TXT) (T) 79 80
8. Alignments 83
9. Circuit Descriptions, Abbreviation List, and IC Data Sheets 89
   - Abbreviation List 90
   - IC Data Sheets 93
10. Spare Parts List 97
11. Revision List 107

©Copyright 2007 Philips Consumer Electronics B.V. Eindhoven, The Netherlands.
All rights reserved. No part of this publication may be reproduced, stored in a retrieval system or transmitted, in any form or by any means, electronic, mechanical, photocopying, or otherwise without the prior permission of Philips.

Published by WS 0770 BU CD Customer Service Printed in the Netherlands Subject to modification EN 3122 785 16241

PHILIPS

1. Technical Specifications, Connections, and Chassis Overview

Index of this chapter:

1.1 Technical Specifications
1.2 Connection Overview
1.3 Chassis Overview

Notes:

- Figures can deviate due to the different set executions.
- Specifications are indicative (subject to change).

1.1 Technical Specifications

1.1.1 Vision

Display type	:	Plasma
Screen size	:	42” (107 cm), 15:9
Resolution (HxV pixels)	:	
- 42PF3321/10	:	852 x 480
- 42PF5321/10/12	:	852 x 480
- 42PF5411/10	:	852 x 480
- 42PF7321/10/12	:	1024 x 768
Contrast ratio (typical)	:	
- 42PF3321/10	:	3000:1
- 42PF5321/10/12	:	7000:1
- 42PF5411/10	:	7000:1
- 42PF7321/10/12	:	7000:1
Light output (cd/m^2)	:	
- 42PF3321/10	:	1000:1
- 42PF5321/10/12	:	1100:1
- 42PF5411/10	:	1100:1
- 42PF7321/10/12	:	1100:1
Viewing angle (HxV degrees)	:	160 x 160
Tuning system	:	PLL
TV Colour systems	:	PAL B/G, D/K, I
	:	SECAM B/G, D/K, L/L’
Video playback	:	NTSC M/N 3.58, 4.43
	:	PAL B/G
	:	SECAM L/L’
Supported computer formats	:	VGA (640x480)
	:	MAC (640x480)
	:	SVGA (800x600)
	:	XVGA (1024x768)
Supported video formats	:	640x480p - 2fH
	:	720x576p - 2fH
	:	1280x720p - 3fH
	:	1920x1080i - 2fH
Presets/channels	:	100 presets
Tuner bands	:	VHF
	:	UHF
	:	S-band
	:	Hyper-band

1.1.2 Sound

Sound systems	:	NICAM B/G, D/K, I, L
	:	AV Stereo
Maximum power (W_{RMS})	:	2 x 15

1.1.3 Miscellaneous

Power supply:		
Mains voltage (V_{AC})	:	220 - 240
Mains frequency (Hz)	:	50 / 60
Ambient conditions:		
- Temperature range (°C)	:	+5 to +40
- Maximum humidity	:	90% R.H.
Power consumption:		
Normal operation (W)	:	220
Stand-by (W)	:	< 2
Dimensions (WxHxD cm):		
- 42PF3321/10	:	123.6 x 67.9 x 10.3
- 42PF5321/10/12	:	123.6 x 67.9 x 10.3
- 42PF5411/10	:	123.6 x 67.9 x 10.3
- 42PF7321/10/12	:	124.9 x 68.8 x 11.1
Weight (kg):		
- 42PF3321/10	:	39.2
- 42PF5321/10/12	:	39.2
- 42PF5411/10	:	39.2
- 42PF7321/10/12	:	42.0

1.2 Connection Overview

Note: The following connector colour abbreviations are used (acc. to DIN/IEC 757): Bk= Black, Bu= Blue, Gn= Green, Gy= Grey, Rd= Red, Wh= White, and Ye= Yellow.

1.2.1 Side I/O connections

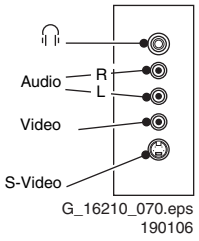

Figure 1-1 Side I/O connections

S-Video (Hosiden): Video Y/C - In

1	- Ground Y	Gnd	
2	- Ground C	Gnd	
3	- Video Y	1 V_{PP} / 75 ohm	
4	- Video C	0.3 V_{PP} / 75 ohm	

Cinch: Video CVBS - In, Audio - In

Ye	- Video CVBS	1 V_{PP} / 75 ohm
Wh	- Audio L	0.5 V_{RMS} / 10 kohm
Rd	- Audio R	0.5 V_{RMS} / 10 kohm

Mini Jack: Audio Head phone - Out

Bk	- Head phone	32 - 600 ohm / 10 mW

1.2.2 Rear Connections

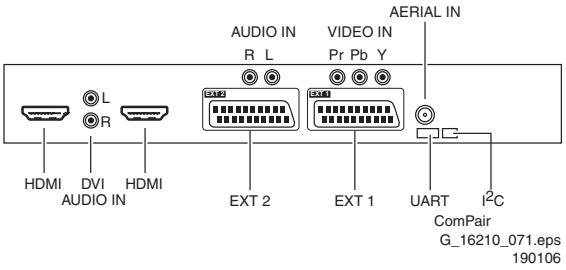

Figure 1-2 Rear I/O

Aerial - In

-	- IEC-type (EU)	Coax, 75 ohm

Cinch: Audio - In

Wh	- Audio L	0.5 V_{RMS} / 10 kohm
Rd	- Audio R	0.5 V_{RMS} / 10 kohm

Cinch: Video YPbPr - In

Gn	- Video Y	1 V_{PP} / 75 ohm
Bu	- Video Pb	0.7 V_{PP} / 75 ohm
Rd	- Video Pr	0.7 V_{PP} / 75 ohm

Cinch: DVI Audio - In

Rd	- Audio - R	0.5 V_{RMS} / 10 kohm
Wh	- Audio - L	0.5 V_{RMS} / 10 kohm

Service connector (ComPair)

1	- SDA-S	I^2C Data (0 - 5 V)
2	- SCL-S	I^2C Clock (0 - 5 V)
3	- Ground	Gnd

Service connector (UART)

1	- UART_TX	Transmit
2	- Ground	Gnd
3	- UART_RX	Receive

HDMI: Digital Video/Digital Audio - In

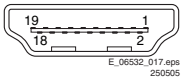

Figure 1-3 HDMI (type A) connector

1	- D2+	Data channel
2	- Shield	Gnd
3	- D2-	Data channel
4	- D1+	Data channel
5	- Shield	Gnd
6	- D1-	Data channel
7	- D0+	Data channel
8	- Shield	Gnd
9	- D0-	Data channel
10	- CLK+	Data channel
11	- Shield	Gnd
12	- CLK-	Data channel
13	- n.c.	
14	- n.c.	
15	- DDC_SCL	DDC clock
16	- DDC_SDA	DDC data
17	- Ground	Gnd
18	- +5V	
19	- HPD	Hot Plug Detect
20	- Ground	Gnd

EXT1: Video RGB - In, CVBS - In/Out, Audio - In/Out

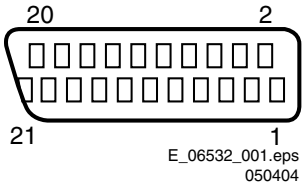

Figure 1-4 SCART connector

1	- Audio R	0.5 V_{RMS} / 1 kohm
2	- Audio R	0.5 V_{RMS} / 10 kohm
3	- Audio L	0.5 V_{RMS} / 1 kohm
4	- Ground Audio	Gnd
5	- Ground Blue	Gnd
6	- Audio L	0.5 V_{RMS} / 10 kohm
7	- Video Blue	0.7 V_{PP} / 75 ohm
8	- Function Select	0 - 2 V: INT 4.5 - 7 V: EXT 16:9 9.5 - 12 V: EXT 4:3
9	- Ground Green	Gnd
10	- n.c.	
11	- Video Green	0.7 V_{PP} / 75 ohm
12	- n.c.	
13	- Ground Red	Gnd
14	- Ground	Gnd
15	- Video Red	0.7 V_{PP} / 75 ohm
16	- Status/FBL	0 - 0.4 V: INT 1 - 3 V: EXT / 75 ohm
17	- Ground Video	Gnd
18	- Ground FBL	Gnd
19	- Video Terr. CVBS	1 V_{PP} / 75 ohm
20	- Video CVBS/Y	1 V_{PP} / 75 ohm
21	- Shield	Gnd

EXT2: Video Y/C - in, CVBS - In/Out, Audio - In/Out

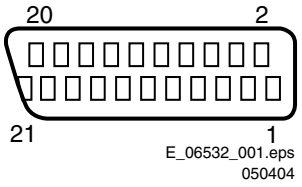

Figure 1-5 SCART connector

1	- Audio R	0.5 V_{RMS} / 1 kohm
2	- Audio R	0.5 V_{RMS} / 10 kohm
3	- Audio L	0.5 V_{RMS} / 1 kohm
4	- Ground Audio	Gnd
5	- Ground Blue	Gnd
6	- Audio L	0.5 V_{RMS} / 10 kohm
7	- n.c.	
8	- Function Select	0 - 2 V: INT 4.5 - 7 V: EXT 16:9 9.5 - 12 V: EXT 4:3
9	- Ground Green	Gnd
10	- n.c.	
11	- n.c.	
12	- n.c.	
13	- Ground Red	Gnd
14	- Ground	Gnd
15	- YC/C - in	0.7 V_{PP} / 75 ohm
16	- n.c.	
17	- Ground Video	Gnd
18	- Ground	Gnd
19	- Video Mon. CVBS	1 V_{PP} / 75 ohm
20	- YC/Y - in	0.7 V_{PP} / 75 ohm
21	- Shield	Gnd

1.3 Chassis Overview

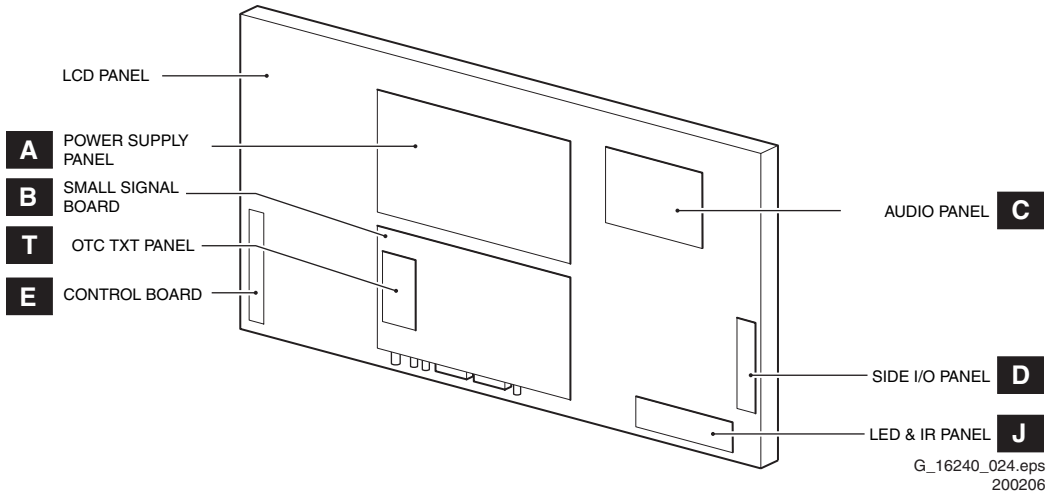

Figure 1-6 Chassis overview

2. Safety Instructions, Warnings, and Notes

Index of this chapter:

2.1 Safety Instructions
2.2 Warnings
2.3 Notes

2.1 Safety Instructions

Safety regulations require the following **during** a repair:

- Connect the set to the Mains (AC Power) via an isolation transformer (> 800 VA).
- Replace safety components, indicated by the symbol ⚠, only by components identical to the original ones. Any other component substitution (other than original type) may increase risk of fire or electrical shock hazard.

Safety regulations require that **after** a repair, the set must be returned in its original condition. Pay in particular attention to the following points:

- Route the wire trees correctly and fix them with the mounted cable clamps.
- Check the insulation of the Mains (AC Power) lead for external damage.
- Check the strain relief of the Mains (AC Power) cord for proper function.
- Check the electrical DC resistance between the Mains (AC Power) plug and the secondary side (only for sets that have a Mains (AC Power) isolated power supply):
  1. Unplug the Mains (AC Power) cord and connect a wire between the two pins of the Mains (AC Power) plug.
  2. Set the Mains (AC Power) switch to the “on” position (keep the Mains (AC Power) cord unplugged!).
  3. Measure the resistance value between the pins of the Mains (AC Power) plug and the metal shielding of the tuner or the aerial connection on the set. The reading should be between 4.5 Mohm and 12 Mohm.
  4. Switch “off” the set, and remove the wire between the two pins of the Mains (AC Power) plug.
- Check the cabinet for defects, to prevent touching of any inner parts by the customer.

2.2 Warnings

- All ICs and many other semiconductors are susceptible to electrostatic discharges (ESD ⚠). Careless handling during repair can reduce life drastically. Make sure that, during repair, you are connected with the same potential as the mass of the set by a wristband with resistance. Keep components and tools also at this same potential. Available ESD protection equipment:
  – Complete kit ESD3 (small tablemat, wristband, connection box, extension cable and earth cable) 4822 310 10671.
  – Wristband tester 4822 344 13999.
- Be careful during measurements in the high voltage section.
- Never replace modules or other components while the unit is switched “on”.
- When you align the set, use plastic rather than metal tools. This will prevent any short circuits and the danger of a circuit becoming unstable.

2.3 Notes

2.3.1 General

- Measure the voltages and waveforms with regard to the chassis (= tuner) ground (⏚), or hot ground (⏚), depending on the tested area of circuitry. The voltages and waveforms shown in the diagrams are indicative. Measure them in the Service Default Mode (see chapter 5) with a colour bar signal and stereo sound (L: 3 kHz, R: 1 kHz unless stated otherwise) and picture carrier at 475.25 MHz for PAL, or 61.25 MHz for NTSC (channel 3).
- Where necessary, measure the waveforms and voltages with (⏋⏌) and without (⏋⏌) aerial signal. Measure the voltages in the power supply section both in normal operation (⏻) and in stand-by (⏻). These values are indicated by means of the appropriate symbols.
- The semiconductors indicated in the circuit diagram and in the parts lists, are interchangeable per position with the semiconductors in the unit, irrespective of the type indication on these semiconductors.

2.3.2 Schematic Notes

- All resistor values are in ohms, and the value multiplier is often used to indicate the decimal point location (e.g. 2K2 indicates 2.2 kohm).
- Resistor values with no multiplier may be indicated with either an "E" or an "R" (e.g. 220E or 220R indicates 220 ohm).
- All capacitor values are given in micro-farads (μ= x10^{-6}), nano-farads (n= x10^{-9}), or pico-farads (p= x10^{-12}).
- Capacitor values may also use the value multiplier as the decimal point indication (e.g. 2p2 indicates 2.2 pF).
- An "asterisk" (*) indicates component usage varies. Refer to the diversity tables for the correct values.
- The correct component values are listed in the Spare Parts List. Therefore, always check this list when there is any doubt.

2.3.3 Rework on BGA (Ball Grid Array) ICs

General

Although (LF)BGA assembly yields are very high, there may still be a requirement for component rework. By rework, we mean the process of removing the component from the PWB and replacing it with a new component. If an (LF)BGA is removed from a PWB, the solder balls of the component are deformed drastically so the removed (LF)BGA has to be discarded.

Device Removal

As is the case with any component that, is being removed, it is essential when removing an (LF)BGA, that the board, tracks, solder lands, or surrounding components are not damaged. To remove an (LF)BGA, the board must be uniformly heated to a temperature close to the reflow soldering temperature.
A uniform temperature reduces the risk of warping the PWB. To do this, we recommend that the board is heated until it is certain that all the joints are molten. Then carefully pull the component off the board with a vacuum nozzle. For the appropriate temperature profiles, see the IC data sheet.

Area Preparation

When the component has been removed, the vacant IC area must be cleaned before replacing the (LF)BGA.
Removing an IC often leaves varying amounts of solder on the mounting lands. This excessive solder can be removed with either a solder sucker or solder wick. The remaining flux can be removed with a brush and cleaning agent.

After the board is properly cleaned and inspected, apply flux on the solder lands and on the connection balls of the (LF)BGA.
Note: Do not apply solder paste, as this has been shown to result in problems during re-soldering.

Device Replacement
The last step in the repair process is to solder the new component on the board. Ideally, the (LF)BGA should be aligned under a microscope or magnifying glass. If this is not possible, try to align the (LF)BGA with any board markers. So as not to damage neighbouring components, it may be necessary to reduce some temperatures and times.

More Information
For more information on how to handle BGA devices, visit this URL: *www.atyourservice.ce.philips.com* (needs subscription, not available for all regions). After login, select “Magazine”, then go to “Repair downloads”. Here you will find Information on how to deal with BGA-ICs.

2.3.4 Lead-free Solder

Philips CE is producing lead-free sets (PBF) from 1.1.2005 onwards.

Identification: The bottom line of a type plate gives a 14-digit serial number. Digits 5 and 6 refer to the production year, digits 7 and 8 refer to production week (in example below it is 1991 week 18).

E_06532_024.eps
130606

Figure 2-1 Serial number example

Regardless of the special lead-free logo (which is not always indicated), one must treat all sets from this date onwards according to the rules as described below.

Figure 2-2 Lead-free logo

Due to lead-free technology some rules have to be respected by the workshop during a repair:

- Use only lead-free soldering tin Philips SAC305 with order code 0622 149 00106. If lead-free solder paste is required, please contact the manufacturer of your soldering equipment. In general, use of solder paste within workshops should be avoided because paste is not easy to store and to handle.
- Use only adequate solder tools applicable for lead-free soldering tin. The solder tool must be able:
  - To reach a solder-tip temperature of at least 400°C.
  - To stabilise the adjusted temperature at the solder-tip.
  - To exchange solder-tips for different applications.
- Adjust your solder tool so that a temperature of around 360°C - 380°C is reached and stabilised at the solder joint. Heating time of the solder-joint should not exceed ~ 4 sec. Avoid temperatures above 400°C, otherwise wear-out of tips will increase drastically and flux-fluid will be destroyed. To avoid wear-out of tips, switch “off” unused equipment or reduce heat.
- Mix of lead-free soldering tin/parts with leaded soldering tin/parts is possible but PHILIPS recommends strongly **to avoid** mixed regimes. If this cannot be avoided, carefully clear the solder-joint from old tin and re-solder with new tin.
- Use only original spare-parts listed in the Service-Manuals. Not listed standard material (commodities) has to be purchased at external companies.
- Special information for lead-free BGA ICs: these ICs will be delivered in so-called "dry-packaging" to protect the IC against moisture. This packaging may only be opened shortly before it is used (soldered). Otherwise the body of the IC gets "wet" inside and during the heating time the structure of the IC will be destroyed due to high (steam-) pressure inside the body. If the packaging was opened before usage, the IC has to be heated up for some hours (around 90°C) for drying (think of ESD-protection!).
  Do not re-use BGAs at all!
- For sets produced before 1.1.2005, containing leaded soldering tin and components, all needed spare parts will be available till the end of the service period. For the repair of such sets nothing changes.

In case of doubt whether the board is lead-free or not (or with mixed technologies), you can use the following method:

- Always use the highest temperature to solder, when using SAC305 (see also instructions below).
- De-solder thoroughly (clean solder joints to avoid the mixing of two alloys).

Caution: For BGA-ICs, you **must** use the correct temperature profile, which is coupled to the 12NC. For an overview of these profiles, visit the website *www.atyourservice.ce.philips.com* (needs subscription, and is not available for all regions).
You will find this and more technical information within the “Magazine”, chapter “Repair downloads”.
For additional questions please contact your local repair help desk.

2.3.5 Practical Service Precautions

- **It makes sense to avoid exposure to electrical shock.** While some sources are expected to have a possible dangerous impact, others of quite high potential are of limited current and are sometimes held in less regard.
- **Always respect voltages**. While some may not be dangerous in themselves, they can cause unexpected reactions that are best avoided. Before reaching into a powered TV set, it is best to test the high voltage insulation. It is easy to do, and is a good service precaution.

3. Directions for Use

You can download this information from the following websites:
http://www.philips.com/support
http://www.p4c.philips.com

4. Mechanical Instructions

Index of this chapter:

4.1 Cable Dressing
4.2 Service Position
4.3 Assy/Panel Removal
4.4 Set Re-assembly

Notes:

- Figures below can deviate slightly from the actual situation, due to the different set executions.
- Follow the disassembling instructions in described order.

4.1 Cable Dressing

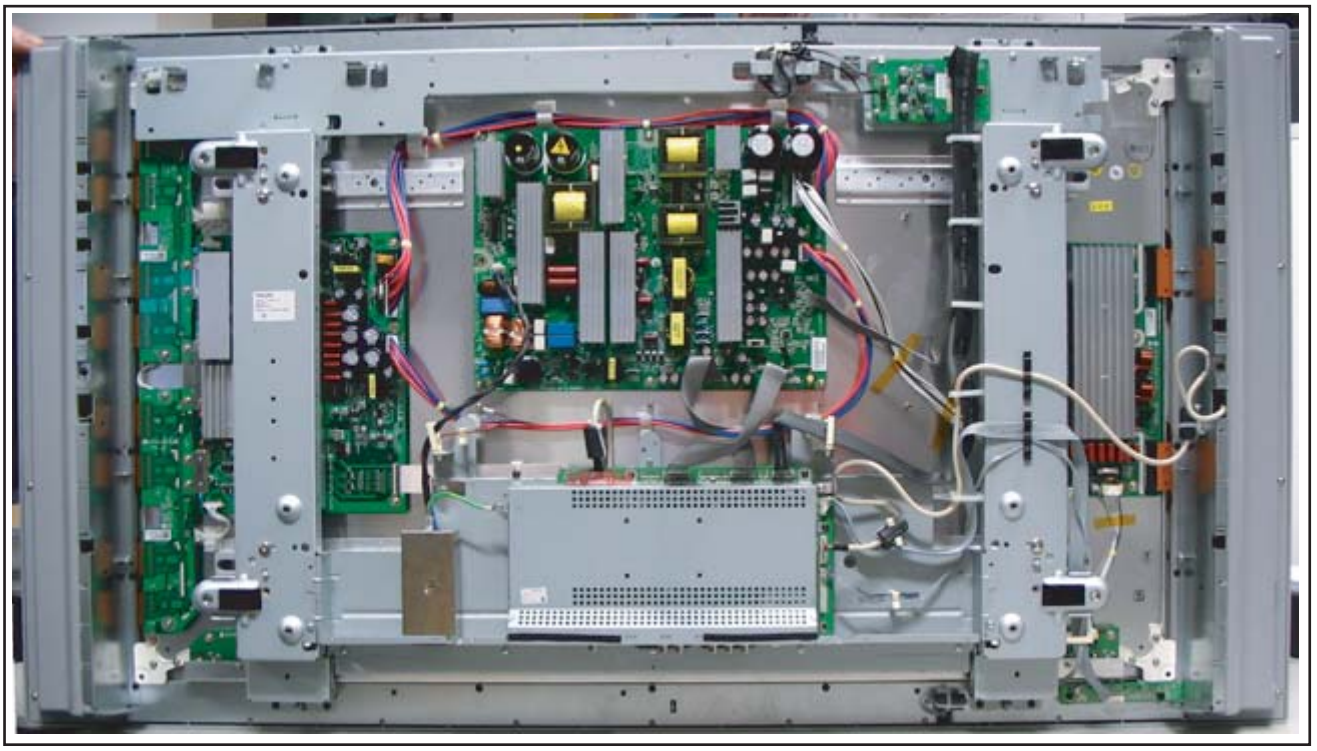

G_16240_011.eps
150206

Figure 4-1 Cable dressing

4.2 Service Position

First, put the TV set in its service position. Therefore, place it upside down on a table top (use a protection sheet or foam bars).

4.2.1 The Foam Bars

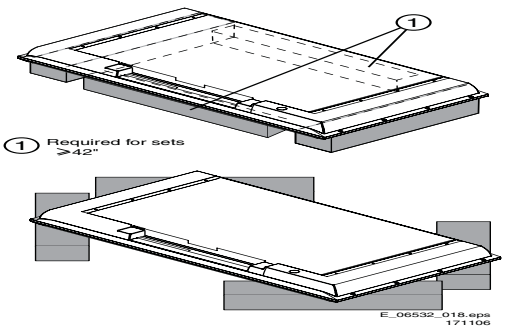

Figure 4-2 Foam bars

The foam bars (order code 3122 785 90580) can be used for all types and sizes of Flat TVs. By laying the plasma TV flat on the (ESD protective) foam bars, a stable situation is created to perform measurements and alignments. By first placing a mirror flat on the table under the TV you can easily see if something is happening on the screen.

4.3 Assy/Panel Removal

4.3.1 Rear Cover

Warning: Disconnect the mains power cord before you remove the rear cover.

1. Remove the screws that secure the rear cover.
2. Lift the rear cover from the cabinet cautiously. Make sure that wires and other internal components are not damaged during cover removal.

4.3.2 Side I/O Panel

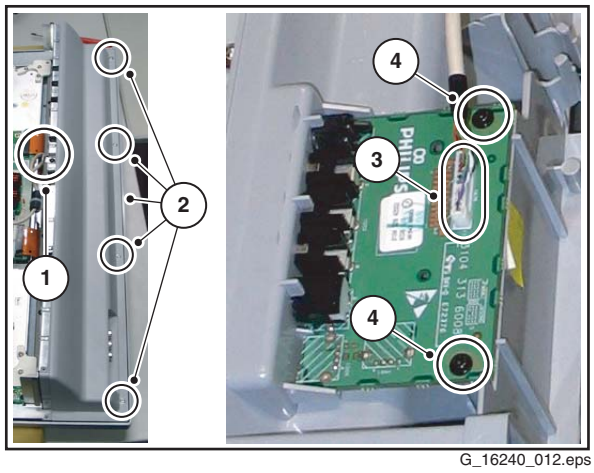

G_16240_012.eps
150206

Figure 4-3 Side I/O panel

1. Remove the rear panel.
2. Remove the screw from the cable clip [1].
3. Remove the screws [2] from the loudspeaker cabinet.
4. Lift the loudspeaker cabinet from the frame.
5. Disconnect the cable [3] from the panel.
6. Remove the fixation screws [4], and slide the panel out of its bracket.

4.3.3 LED Panel

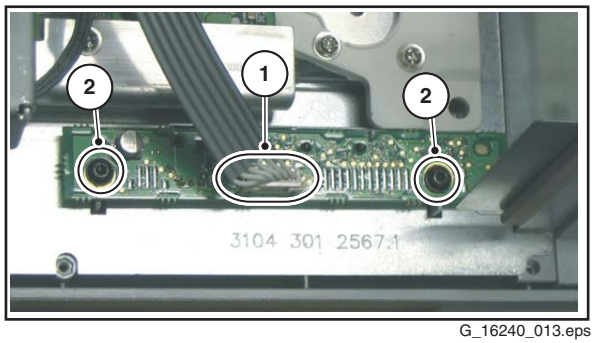

G_16240_013.eps
170206

Figure 4-4 LED panel

1. Remove the rear panel.
2. Disconnect the cable [1] from the panel.
3. Remove the fixation screws [2].
4. Remove the panel.

4.3.4 Keyboard Control Panel

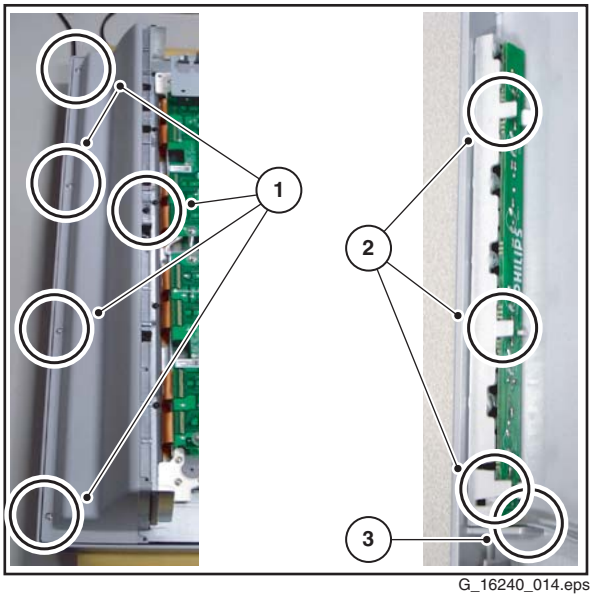

G_16240_014.eps
170206

Figure 4-5 Keyboard control panel

1. Remove the rear panel.
2. Remove the screws [1] from the loudspeaker cabinet.
3. Lift the loudspeaker cabinet from the frame.
4. Release the three fixation clamps [2] and pull the panel out of the bracket.
5. Disconnect the cable [3] from the panel.

4.3.5 Small Signal Board

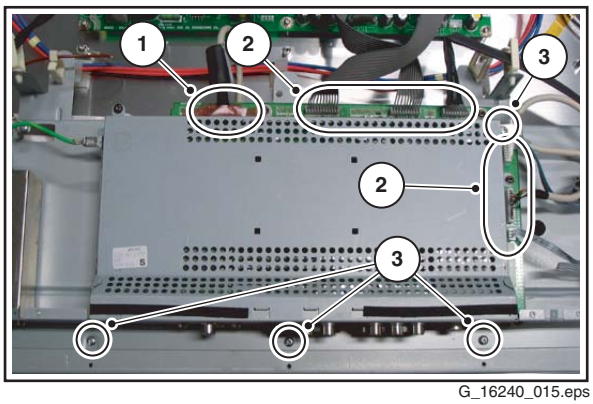

G_16240_015.eps
250706

Figure 4-6 SSB connectors

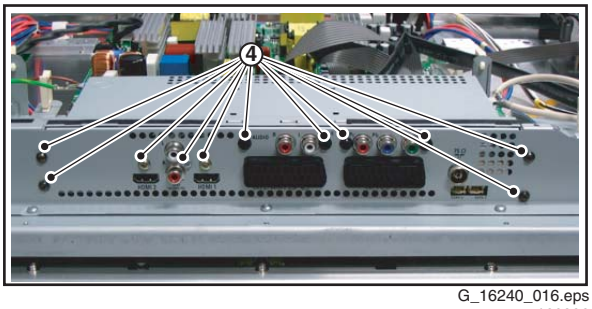

G_16240_016.eps
160206

Figure 4-7 Connector screws

1. Very **cautiously** disconnect the LVDS cable [1] from the panel (see Figure “SSB connectors”). Notice that this cable is very fragile.
2. Disconnect the other cables [2] from the panel.
3. Remove the fixation screws [3].
4. Remove the fixation screws [4] from the connector plate (see Figure “Connector screws”).
5. Slide the SSB module a few centimetres away from the connector plate (see Figure “SSB shield”).
6. Remove the fixation screws [5] and lift the shield from the SSB module.
7. Disconnect connector [6] (see Figure “SSB panel”).
8. Unlock the catches [7] and lift the OTC TXT panel from the SSB panel.
9. Remove the fixation screws [8].
10. Remove the SSB panel.

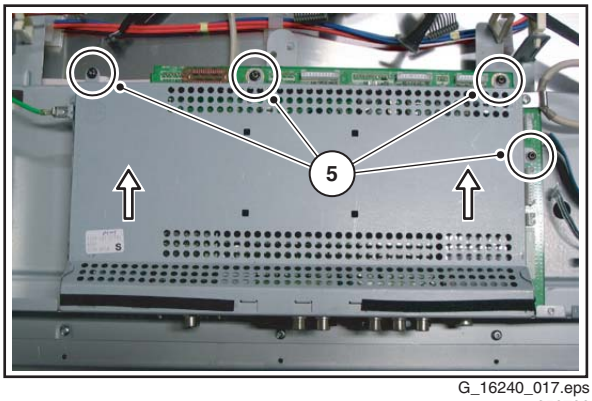

G_16240_017.eps
250706

Figure 4-8 SSB shield

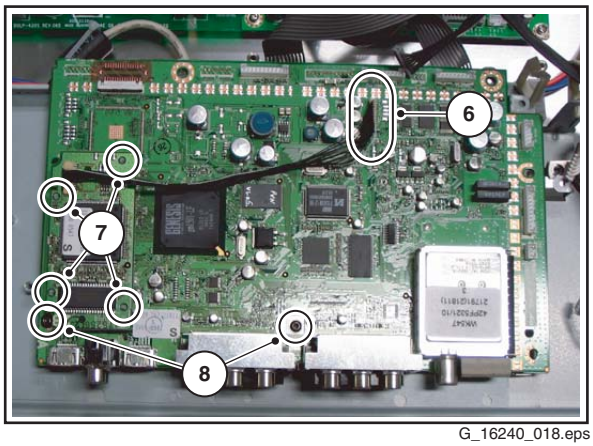

G_16240_018.eps
250706

Figure 4-9 SSB panel

4.3.6 Audio Amplifier Panel

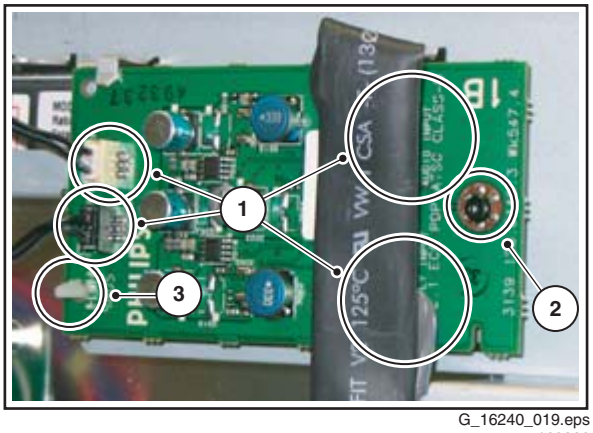

G_16240_019.eps
160206

Figure 4-10 Audio amplifier panel

1. Disconnect all cables [1] from the panel.
2. Remove the fixation screws [2] from the panel.
3. Remove the panel.

4.3.7 Plasma Panel

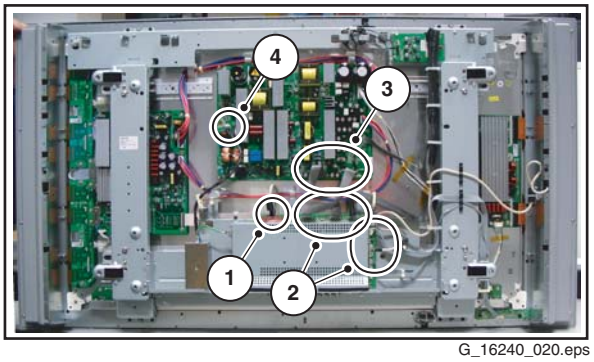

G_16240_020.eps
160206

Figure 4-11 Plasma panel removal (1/3)

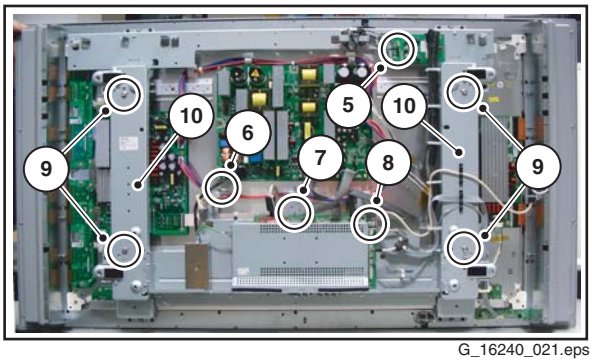

G_16240_021.eps
170206

Figure 4-12 Plasma panel removal (2/3)

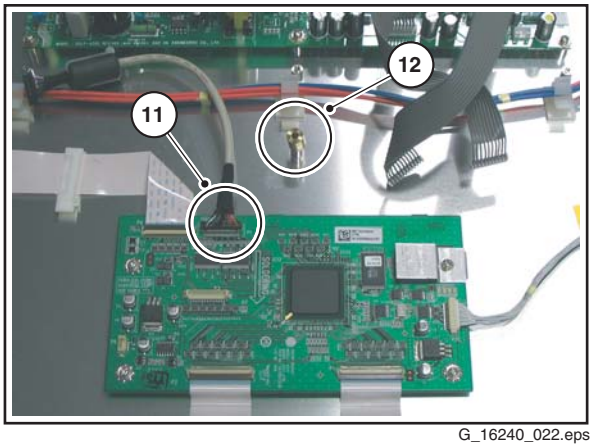

G_16240_022.eps
160206

Figure 4-13 Plasma panel removal (3/3)

To remove the Plasma-panel, carry out the following steps:

1. Remove the rear cover from the set.
2. **Cautiously** unplug the LVDS connector [1] from the SSB panel (see Figure “LVDS connector”).
   Be careful, as this is a very fragile connector/cable!
3. Unplug the other connectors [2] from the SSB panel.
4. Unplug the connectors 1M03 and 1M46 [3] from the Power Supply board.
5. Unplug the power connector CN1305 [4] from the Power Supply board.
6. Unplug the connectors [5] from the Audio Panel.
7. Loosen the fixation screw [6] from the earth tab on the display.
8. Loosen the fixation screw [7] just above the SSB panel.
9. Loosen screw [8] with the cable clamp.
10. Release all disconnected cables from the (mostly plastic) guidances on the frame.
11. Loosen screws [9].
12. Lift the metal frame [10] (together with the SSB) from the plasma panel.
13. **Cautiously** unplug the LVDS connector [11] from the Logic Board of the Plasma panel (see Figure “Logic Board”).
    Be careful, as this is a very fragile connector/cable!
14. Remove the bronze bushing [12] from the stud on the plasma panel.
15. Now you can lift the Plasma display from its plastic frame.
16. If the plastic frame is damaged, replace it by a new frame, after removing the loudspeakers, the Side I/O panel, the Side Control panel, and the LED panel.

4.4 Set Re-assembly

To re-assemble the whole set, execute all processes in reverse order.

Notes:

- While re-assembling, make sure that all cables are placed and connected in their original positions. See Figure “Cable dressing”.
  Be careful with the fragile LVDS cable.

5. Service Modes, Error Codes, and Fault Finding

Index of this chapter:

5.1 Test Points
5.2 Service Modes
5.3 Problems and Solving Tips Related to CSM
5.4 Service Tools
5.5 Error Codes
5.6 The Blinking LED Procedure
5.7 Fault Finding and Repair Tips

5.1 Test Points

This chassis is equipped with test points. In the schematics, test points are indicated with a rectangle box around Fxxx or Ixxx, in the layouts with a half-moon.
Perform measurements under the following conditions:

- Television set in Service Default Mode.
- Video input: Colour bar signal.
- Audio input: 3 kHz left channel, 1 kHz right channel.

5.2 Service Modes

Service Default mode (SDM) and Service Alignment Mode (SAM) offer several features for the service technician, while the Customer Service Mode (CSM) is used for communication between the call centre and the customer.

This chassis also offers the option of using ComPair, a hardware interface between a computer and the TV chassis. It offers the possibilities of structured troubleshooting, error code reading, and software version read-out for all chassis.
Minimum requirements for ComPair: a Pentium processor, a Windows OS, and a CD-ROM drive (see also paragraph "ComPair").

5.2.1 Service Default Mode (SDM)

Purpose

- To create a predefined setting for measurements to be made.
- To override software protections.
- To start the blinking LED procedure.
- To inspect the error buffer.
- To check the life timer.

Specifications

- Tuning frequency: 475.25 MHz.
- Colour system: PAL-BG.
- All picture settings at 50% (brightness, colour contrast, hue).
- Bass, treble, and balance at 50 %; volume at 25 %.
- All service-unfriendly modes (if present) are disabled. The service unfriendly modes are:
  - Timer / Sleep timer.
  - Child / parental lock.
  - Blue mute.
  - Hotel / hospital mode.
  - Auto shut off (when no “IDENT” video signal is received for 15 minutes).
  - Skipping of non-favourite presets / channels.
  - Auto-storage of personal presets.
  - Auto user menu time-out.
  - Auto Volume Levelling (AVL).

How to Enter

To enter SDM, use one of the following methods:

- Press the following key sequence on the remote control transmitter: “**062596**” directly followed by the MENU button (do not allow the display to time out between entries while keying the sequence).
- Short one of the "Service" jumpers on the TV board during cold start and apply mains (see Figures "Service jumper"). Then press the mains button (remove the short after start-up).
  Caution: Entering SDM by shorting "Service" jumpers will override the +8V-protection. Do this only for a short period. When doing this, the service-technician must know exactly what he is doing, as it could damage the television set.
- Or via ComPair.

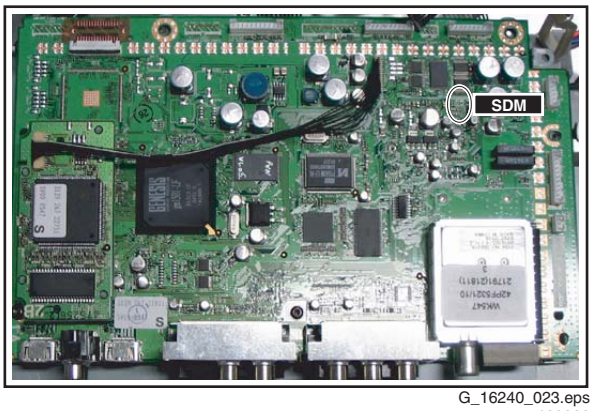

G_16240_023.eps
160206

Figure 5-1 Service jumper (component side)

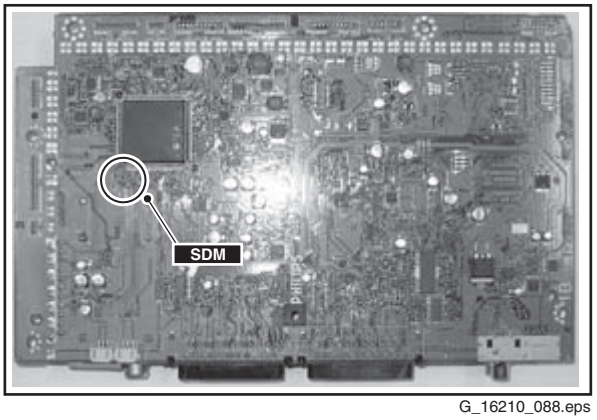

G_16210_088.eps
200106

Figure 5-2 Service jumper (solder side)

After entering SDM, the following screen is visible, with SDM in the upper right corner of the screen to indicate that the television is in Service Default Mode.

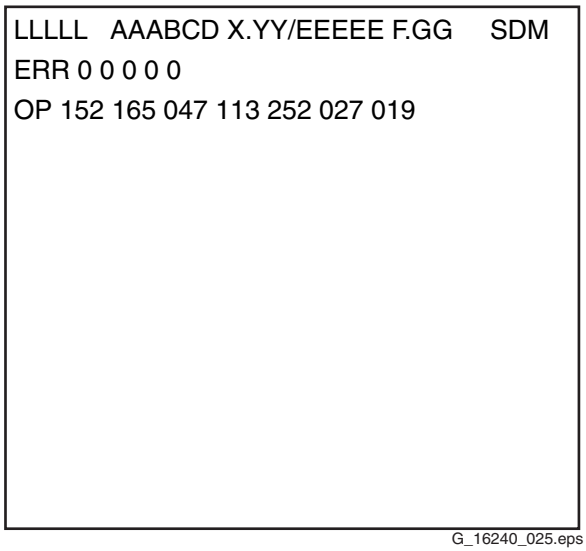

G_16240_025.eps
200206

Figure 5-3 SDM menu (the values are indicative)

How to Navigate

Use one of the following methods:

- When you press the MENU button on the remote control, the set will switch on the normal user menu in the SDM mode.
- On the TV, press and hold the VOLUME DOWN and press the CHANNEL DOWN for a few seconds, to switch from SDM to SAM and reverse; or press the following key sequence on the remote control transmitter: "**062596**" directly followed by the OSD button to switch to SAM (do not allow the display to time out between entries while keying the sequence).

How to Exit

Switch the set to STANDBY by pressing the mains button on the remote control transmitter or the television set.
If you turn the television set off by removing the mains (i.e., unplugging the television) without using the mains button, the television set will remain in SDM when mains is re-applied, and the error buffer is not cleared.

5.2.2 Service Alignment Mode (SAM)

Purpose

- To change option settings.
- To display / clear the error code buffer.
- To perform alignments.

Specifications

- Operation hours counter (maximum five digits displayed).
- Software version, Error codes, and Option settings display.
- Error buffer clearing.
- Option settings.
- Software alignments (Tuner, White Tone, Geometry & Audio).
- NVM Editor.
- ComPair Mode switching.

How to Enter

To enter SAM, use one of the following methods:

- Press the following key sequence on the remote control transmitter: "**062596**" directly followed by the OSD/ STATUS/INFO(I+) button (do not allow the display to time out between entries while keying the sequence).
- Or via ComPair.

After entering SAM, the following screen is visible, with SAM in the upper right corner of the screen to indicate that the television is in Service Alignment Mode.

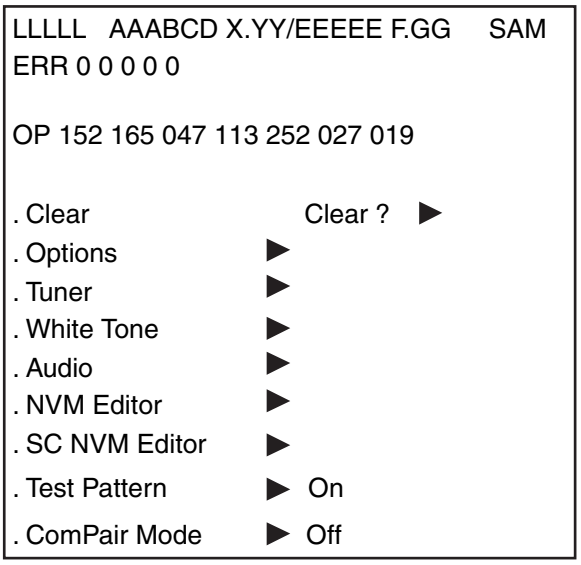

G_16240_026.eps
200206

Figure 5-4 SAM menu (the values are indicative)

Menu Explanation

1. **LLLLL.** This represents the run timer. The run timer counts normal operation hours, but does not count standby hours.
2. **AAABCD X.YY.** This is the software identification of the main microprocessor:
   - **A**= the project name (LC04.x).
   - **B**= the region: E= Europe, A= Asia Pacific, U= NAFTA, L= LATAM.
   - **C**= the software diversity:
     - **Europe:** T= 1 page TXT, F= Full TXT, V= Voice control.
     - **LATAM and NAFTA:** N= Stereo non-dBx, S= Stereo dBx.
     - **Asian Pacific:** T= TXT, N= non-TXT, C= NTSC.
     - **ALL regions:** M= mono, D= DVD, Q= Mk2.
   - **D**= the language cluster number.
   - **X**= the main software version number (updated with a major change that is incompatible with previous versions).
   - **Y**= the sub software version number (updated with a minor change that is compatible with previous versions).
3. **EEEEE F.GG.** This is the software identification of the Scaler:
   - **EEEEEE**= the scaler sw cluster
   - **F**= the main sw version no.
   - **GG**= the sub-version no.
4. **SAM.** Indication of the Service Alignment Mode.
5. **Error Buffer.** Shows all errors detected since the last time the buffer was erased. Five errors possible.
6. **Option Bytes.** Used to read-out the option bytes. See "Options" in the Alignments section for a detailed description. Seven codes are possible.
7. **Clear.** Erases the contents of the error buffer. Select the CLEAR menu item and press the MENU RIGHT key. The content of the error buffer is cleared.
8. **Options.** Used to set the option bits. See "Options" in the Alignments section for a detailed description.
9. **Tuner.** Used to align the tuner. See "Tuner" in the Alignments section for a detailed description.
10. **White Tone.** Used to align the white tone. See "White Tone" in the Alignments section for a detailed description.
11. **Audio.** No audio alignment is necessary for this television set.

12. **NVM Editor.** Can be used to change the NVM data in the television set. See table “NVM data” further on.
13. **SC NVM Editor.** Can be used to edit Scaler NVM.
14. **Test pattern.** No function in this set.
15. **ComPalr.** Can be used to switch on the television to In System Programming (ISP) mode, for software uploading via ComPair.
    Caution: When this mode is selected without ComPair connected, the TV will be blocked. Remove the AC power to reset the TV.

How to Navigate

- In SAM, select menu items with the MENU UP/DOWN keys on the remote control transmitter. The selected item will be indicated. When not all menu items fit on the screen, use the MENU UP/DOWN keys to display the next / previous menu items.
- With the MENU LEFT/RIGHT keys, it is possible to:
  – Activate the selected menu item.
  – Change the value of the selected menu item.
  – Activate the selected submenu.
- In SAM, when you press the MENU button twice, the set will switch to the normal user menus (with the SAM mode still active in the background). To return to the SAM menu press the MENU button.
- When you press the MENU key in while in a submenu, you will return to the previous menu.
- On the TV, press and hold the VOLUME DOWN and press the CHANNEL DOWN for a few seconds, to switch from SAM to SDM and reverse; or press the following key sequence on the remote control transmitter: “**062596**” directly followed by the MENU button to switch to SDM (do not allow the display to time out between entries while keying the sequence).

How to Store SAM Settings

To store the settings changed in SAM mode, leave the top level SAM menu by using the POWER button on the remote control transmitter or the television set.

How to Exit

Switch the set to STANDBY by pressing the mains button on the remote control transmitter or the television set.
If you turn the television set “off” by removing the mains (i.e., unplugging the television) without using the mains button, the television set will remain in SAM when mains is re-applied, and the error buffer is not cleared.

5.2.3 Customer Service Mode (CSM)

Purpose

The Customer Service Mode shows error codes and information on the TV’s operation settings. The call centre can instruct the customer (by telephone) to enter CSM in order to identify the status of the set. This helps the call centre to diagnose problems and failures in the TV set before making a service call.
The CSM is a read-only mode; therefore, modifications are not possible in this mode.

How to Enter

To enter CSM, press the following key sequence on the remote control transmitter: “**123654**” (do not allow the display to time out between entries while keying the sequence).

Upon entering the Customer Service Mode, the following screen will appear:

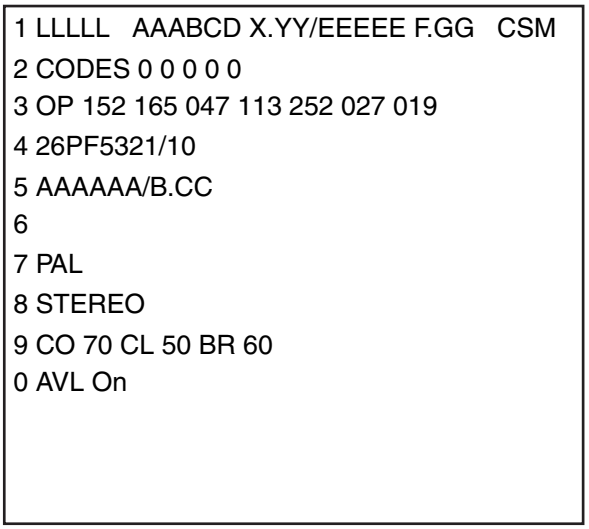

G_16240_027.eps
200206

Figure 5-5 CSM menu (the values are indicative)

Menu Explanation

1. Indication of the decimal value of the operation hours counter, Main/Scaler software version (see “Service Alignment Mode" for an explanation), and the service mode (CSM = Customer Service Mode).
2. Displays the last five errors detected in the error code buffer.
3. Displays the option bytes.
4. Displays the type number version of the set.
5. **AAAAAA / B.CCC** Firmware identification of the Pacific 3 and the OTC:
   – **AAAAAA** = the firmware version of the Pacific 3 (Pixel+)
   – **B.CCC** = the firmware version of the OTC (for the 1000 page TXT decoder).
6. Indicates the television is receiving an "IDENT" signal on the selected source. If no "IDENT" signal is detected, the display will read "NOT TUNED".
7. Displays the detected Colour system (e.g. PAL/NTSC).
8. Displays the detected Audio (e.g. stereo/mono).
9. Displays the picture setting information.
10. Displays the sound setting information.

How to Exit

To exit CSM, use one of the following methods:

- Press the MENU button twice, or POWER button on the remote control transmitter.
- Press the POWER button on the television set.

5.3 Problems and Solving Tips Related to CSM

5.3.1 Picture Problems

Note: The problems described below are all related to the TV settings. The procedures used to change the value (or status) of the different settings are described.

Picture too Dark or too Bright

If:

- The picture improves when you press the SMART PICTURE button on the remote control transmitter, or
- The picture improves when you enter the Customer Service Mode,

Then:
1. Press the SMART PICTURE button on the remote control transmitter repeatedly (if necessary) to choose PERSONAL picture mode.
2. Press the MENU button on the remote control transmitter. This brings up the normal user menu.
3. In the normal user menu, use the MENU UP/DOWN keys to select the PICTURE sub menu.
4. Press the MENU LEFT/RIGHT keys to enter the PICTURE sub menu.
5. Use the MENU UP/DOWN keys (if necessary) to select BRIGHTNESS.
6. Press the MENU LEFT/RIGHT keys to increase or decrease the value of the selected parameter.
7. Use the MENU UP/DOWN keys to select STORE.
8. Press the MENU RIGHT key to store the new value.
9. Press the MENU key to exit the PERSONAL picture mode.

White Line around Picture Elements and Text

If:
The picture improves after you have pressed the SMART PICTURE button on the remote control transmitter,

Then:
1. Press the SMART PICTURE button on the remote control transmitter repeatedly (if necessary) to choose PERSONAL picture mode.
2. Press the MENU button on the remote control transmitter. This brings up the normal user menu.
3. In the normal user menu, use the MENU UP/DOWN keys to select the PICTURE sub menu.
4. Press the MENU LEFT/RIGHT keys to enter the PICTURE sub menu.
5. Use the MENU UP/DOWN keys (if necessary) to select SHARPNESS.
6. Press the MENU LEFT/RIGHT keys to increase or decrease the value of the selected parameter.
7. Use the MENU UP/DOWN keys to select STORE.
8. Press the MENU RIGHT key to store the new value.
9. Press the MENU key to exit the PERSONAL picture mode.

Snowy Picture
Check CSM line 6. If this line reads “Not Tuned”, check the following:
- Antenna not connected. Connect the antenna.
- No antenna signal or bad antenna signal. Connect a proper antenna signal.
- The tuner is faulty (in this case line 2, the Error Buffer line, will contain error number 10). Check the tuner and replace/ repair the tuner if necessary.

Black and White Picture

If:
- The picture improves after you have pressed the SMART PICTURE button on the remote control transmitter,

Then:
1. Press the SMART PICTURE button on the remote control transmitter repeatedly (if necessary) to choose PERSONAL picture mode.
2. Press the MENU button on the remote control transmitter. This brings up the normal user menu.
3. In the normal user menu, use the MENU UP/DOWN keys to select the PICTURE sub menu.
4. Press the MENU LEFT/RIGHT keys to enter the PICTURE sub menu.
5. Use the MENU UP/DOWN keys (if necessary) to select COLOUR.
6. Press the MENU LEFT/RIGHT keys to increase or decrease the value of the selected parameter.
7. Use the MENU UP/DOWN keys to select STORE.
8. Press the MENU RIGHT key to store the new value.
9. Press the MENU key to exit the PERSONAL picture mode.

5.4 Service Tools

5.4.1 ComPair

Introduction
ComPair (Computer Aided Repair) is a service tool for Philips Consumer Electronics products. ComPair is a further development on the European DST (service remote control), which allows faster and more accurate diagnostics. ComPair has three big advantages:
1. ComPair helps you to quickly get an understanding on how to repair the chassis in a short time by guiding you systematically through the repair procedures.
2. ComPair allows very detailed diagnostics (on I^2C level) and is therefore capable of accurately indicating problem areas. You do not have to know anything about I^2C commands yourself because ComPair takes care of this.
3. ComPair speeds up the repair time since it can automatically communicate with the chassis (when the microprocessor is working) and all repair information is directly available. When ComPair is installed together with the Force/SearchMan electronic manual of the defective chassis, schematics and PWBs are only a mouse click away.

Specifications
ComPair consists of a Windows based fault finding program and an interface box between PC and the (defective) product. The ComPair interface box is connected to the PC via a serial (or RS-232) cable.
For this chassis, the ComPair interface box and the TV communicate via a bi-directional service cable via the service connector(s).

The ComPair fault finding program is able to determine the problem of the defective television. ComPair can gather diagnostic information in two ways:
- Automatically (by communicating with the television): ComPair can automatically read out the contents of the entire error buffer. Diagnosis is done on I^2C/UART level. ComPair can access the I^2C/UART bus of the television. ComPair can send and receive I^2C/UART commands to the micro controller of the television. In this way, it is possible for ComPair to communicate (read and write) to devices on the I^2C/UART buses of the TV-set.
- Manually (by asking questions to you): Automatic diagnosis is only possible if the micro controller of the television is working correctly and only to a certain extent. When this is not the case, ComPair will guide you through the fault finding tree by asking you questions *(e.g. Does the screen give a picture? Click on the correct answer: YES / NO)* and showing you examples *(e.g. Measure test-point I7 and click on the correct oscillogram you see on the oscilloscope)*. You can answer by clicking on a link *(e.g. text or a waveform picture)* that will bring you to the next step in the fault finding process.

By a combination of automatic diagnostics and an interactive question / answer procedure, ComPair will enable you to find most problems in a fast and effective way.

How to Connect
This is described in the chassis fault finding database in ComPair.

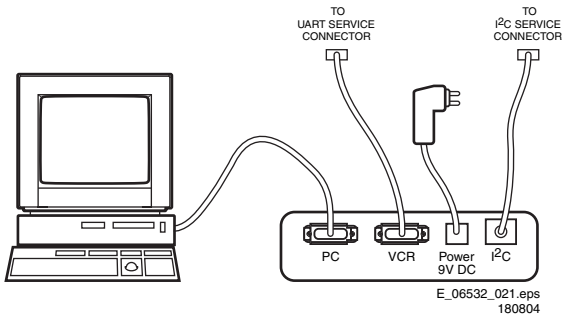

Figure 5-6 ComPair interface connection

How to Order
- ComPair order codes (EU/AP/LATAM):
- Starter kit ComPair32/SearchMan32 software and ComPair interface (excl. transformer): 3122 785 90450.
- ComPair interface (excl. transformer): 4822 727 21631.
- Starter kit ComPair32 software (registration version): 3122 785 60040.
- Starter kit SearchMan32 software: 3122 785 60050.
- ComPair32 CD (update): 3122 785 60070 (year 2002), 3122 785 60110 (year 2003 onwards).
- SearchMan32 CD (update): 3122 785 60080 (year 2002), 3122 785 60120 (year 2003), 3122 785 60130 (year 2004).
- ComPair firmware upgrade IC: 3122 785 90510.
- Transformer (non-UK): 4822 727 21632.
- Transformer (UK): 4822 727 21633.
- ComPair interface cable: 3122 785 90004.
- ComPair interface extension cable: 3139 131 03791.
- ComPair UART interface cable: 3122 785 90630.

Note: If you encounter any problems, contact your local support desk.

5.4.2 LVDS Tool

Introduction
This service tool (also called “ComPair Assistant 1“) may help you to identify, in case the TV does not show any picture, whether the Small Signal Board (SSB) **or** the display of a Flat TV is defective.
Furthermore it is possible to program EPLDs with this tool (Byte blaster). Read the user manual for an explanation of this feature.

Since 2004, the LVDS output connectors in our Flat TV models are standardised (with some exceptions). With the two delivered LVDS interface cables (31p and 20p) you can cover most chassis (in special cases, an extra cable will be offered).

When operating, the tool will show a small (scaled) picture on a VGA monitor. Due to a limited memory capacity, it is not possible to increase the size when processing high-resolution LVDS signals (> 1280x960). Below this resolution, or when a DVI monitor is used, the displayed picture will be full size.

Generally this tool is intended to determine if the SSB is working or not. Thus to determine if LVDS, RGB, and sync signals are okay.

How to Connect
Connections are explained in the user manual, which is packed with the tool.

Note: To use the LVDS tool, you must have ComPair release 2004-1 (or later) on your PC (engine version >= 2.2.05).
For every TV type number and screen size, one must choose the proper settings via ComPair. The ComPair file will be updated regularly with new introduced chassis information.

How to Order
- LVDS tool (incl. two LVDS cables: 31p and 20p): 3122 785 90671.
- LVDS tool Service Manual: 3122 785 00810.
- LVDS cable 30p (for LC4.3): 3122 785 90821 (available soon).
- LVDS cable 41p -> 31p for HD PDPs (dual -> single LVDS): 3122 785 90831 (available soon).

5.5 Error Codes

The error code buffer contains all errors detected since the last time the buffer was erased. The buffer is written from left to right. When an error occurs that is not yet in the error code buffer, it is displayed at the left side and all other errors shift one position to the right.

5.5.1 How to Read the Error Buffer

You can read the error buffer in 3 ways:
- On screen via the SAM (if you have a picture).
  Examples:
  - ERROR: 0 0 0 0 0 : No errors detected
  - ERROR: 6 0 0 0 0 : Error code 6 is the last and only detected error
  - ERROR: 9 6 0 0 0 : Error code 6 was detected first and error code 9 is the last detected (newest) error
- Via the blinking LED procedure (when you have no picture). See “The Blinking LED Procedure”.
- Via ComPair.

5.5.2 How to Clear the Error Buffer

The error code buffer is cleared in the following cases:
- By using the CLEAR command in the SAM menu:
  - To enter SAM, press the following key sequence on the remote control transmitter: “**062596**” directly followed by the OSD/i+ button (do not allow the display to time out between entries while keying the sequence).
  - Make sure the menu item CLEAR is selected. Use the MENU UP/DOWN buttons, if necessary.
  - Press the MENU RIGHT button to clear the error buffer. The text on the right side of the “CLEAR” line will change from “CLEAR?” to “CLEARED”
- If the contents of the error buffer have not changed for 50 hours, the error buffer resets automatically.

Note: If you exit SAM by disconnecting the mains from the television set, the error buffer is not reset.

5.5.3 Error Codes

In case of non-intermittent faults, write down the errors present in the error buffer and clear the error buffer before you begin the repair. This ensures that old error codes are no longer present.
If possible, check the entire contents of the error buffer. In some situations, an error code is only the result of another error and not the actual cause of the problem (for example, a fault in the protection detection circuitry can also lead to a protection).

Table 5-1 Error code overview

Error	Error Description	Check Item	Diagram
0	No Error		
1	Mis-match of TV (Hercules) SW and Scaler SW	Software versions	N.A.
2	+12V from PSU error	PSU	A
3	Plasma I^2C error (only for certain plasma sets)	N.A.	N.A.
4	I^2C error while communicating with the Genesis Scaler	7801	B7 + B8
5	+5V protection	7752	B6
6	General I^2C error; communication between ADC, analogue tuner, and/or Columbus I^2C failed	1102, 7L01, 7M00	B1 + B18 + B19
7	I^2C error while communicating with ADC	7L01	B18
8	I^2C error while communicating with the Scaler EEPROM	7C01	B11
9	I^2C error while communicating with the Hercules EEPROM (NVM for TV). **Remark:** when the Hercules EEPROM is defective, the Hercules should operate with its default values.	7207	B2
10	I^2C error while communicating with the PLL tuner	1102	B1
11	I^2C error while communicating with the 3D combfilter IC-7M00 (Columbus)	7M00	B19
12	I^2C error while communicating with iBoard uP (only iTV sets)	N.A.	N.A.
13	I^2C error while communicating with the HDMI decoder IC-7D03 (only for NAFTA and AP)	N.A.	N.A.
14	Read-write error with the Scaler SDRAM	7B01	B10
15	I^2C error while communicating with the OTC	7001	T
16	I^2C error while communicating with EPLD or Pacific III	7N00	B20 + B21
17	I^2C error while communicating with the Digital Module (only for digital sets)	N.A.	N.A.

5.6 The Blinking LED Procedure

Using this procedure, you can make the contents of the error buffer visible via the front LED. This is especially useful when there is no picture.

When the SDM is entered, the front LED will blink the contents of the error-buffer:

- The LED blinks with as many pulses as the error code number, followed by a time period of 1.5 seconds, in which the LED is off.
- Then this sequence is repeated.

Any RC5 command terminates this sequence.

Example of error buffer: **12 9 6 0 0**
After entering SDM, the following occurs:

- 1 long blink of 5 seconds to start the sequence,
- 12 short blinks followed by a pause of 1.5 seconds,
- 9 short blinks followed by a pause of 1.5 seconds,
- 6 short blinks followed by a pause of 1.5 seconds,
- 1 long blink of 1.5 seconds to finish the sequence,
- The sequence starts again with 12 short blinks.

5.7 Fault Finding and Repair Tips

Notes:

- It is assumed that the components are mounted correctly with correct values and no bad solder joints.
- Before any fault finding actions, check if the correct options are set.

5.7.1 NVM Editor

In some cases, it can be handy if one directly can change the NVM contents. This can be done with the “NVM Editor” in SAM mode. With this option, single bytes can be changed.

Caution:

- **Do not change the NVM settings without understanding the function of each setting, because incorrect NVM settings may seriously hamper the correct functioning of the TV set!**
- **Do not change the Scaler NVM settings, as this will hamper the DVI / HDMI functionality of the TV set!**
- Always note down the existing NVM settings, before changing the settings. This will enable you to return to the original settings, if the new settings turn out to be incorrect.

Table 5-2 NVM editor overview

	Hex	Dec	Description
.ADR	0x000A	10	Existing value
.VAL	0x0000	0	New value
.Store	Store?		

5.7.2 Load Default NVM Values

In case a blank NVM is placed or when the NVM content is corrupted, default values can be downloaded into the NVM. (For empty NVM replacement, short the SDM with a jumper and apply the mains voltage. Remember to remove the jumper after the reload is completed). After the default values are downloaded, it will be possible to start up and to start aligning the TV set. This is no longer initiated automatically; to initiate the download the following action has to be performed:

1. Switch “off” the TV set by disconnecting the AC Power plug.
2. Short circuit an SDM jumper (keep short-circuited).
3. Press P+ or Ch+ on the local keyboard (and keep it pressed).
4. Switch on the TV set via the AC Power plug.
5. Keep pressing the P+/Ch+ button until the set has started up and the SDM is shown.

Alternative method:

1. Go to SAM.
2. Select NVM Editor (not SC NVM Editor).
3. Select ADR (address) to 1 (dec).
4. Change the VAL (value) to 170 (dec).
5. Store the value.
6. Disconnect the mains plug and wait for a few seconds.
7. Reconnect the mains plug and wait until the set goes into its standby mode (red LED lights up).
8. Restart the set.

5.7.3 Flash New Scaler Software

When you need to flash new scaler software, follow the instructions in ComPair. Make sure you put the set in one of the Service Modes, SDM/SAM/CSM, before you start flashing. This reduces the risk of the set hanging during the flashing procedure.

5.7.4 Tuner and IF

No Picture in RF Mode, but there is a Noise Raster

1. Check whether picture is present in AV. If not, go to Video processing troubleshooting section.
2. If present, check if the Option settings are correct.
3. Check if all the supply voltages are present (3.3/5/8/12/33 V).
4. Check if the I^2C lines are working correctly (3.3 V).
5. Manually store a known channel and check if there is IF output at Tuner pin 11.
6. Check the tuning DC voltage at pin 2 of the Tuner. The DC voltage should vary according to the frequency/channel being chosen.
7. If the tuning voltage is OK, check the tuner output, pin 11.
8. If it has no output, the Tuner may have a defect. Change the Tuner.

Sound in Picture Problem for L' System (rolling horizontal lines)

1. Check whether AGC L' in SAM mode is set to 0.
2. If yes, align the set to correct value.

Required System is not Selected Correctly

Check whether a Service jumper (#4204 & 4205, 0805 size) is present. If yes, remove it.

5.7.5 Video Processing

No Power

1. Check +12 V and 3V3 at position 1J02.
2. If no supply, first check the connector 1J02.
3. If the connector is correct, check the power supply board.

Power Supply is Correct, but no Green LED

1. Check if the connectors 1K00 are properly inserted.
2. If they are inserted correctly, check if the 3V3 is present.

No Picture Display (blank screen with correct sound output)

1. Check whether the user menu is visible.
2. If the user menu is OK, activate teletext mode.
3. If teletext is OK, the problem is in the ADC (B18) & Columbus 3D combfilter (B19), if present (depending on model, see also paragraph “Teletext Path” in chapter 9).

Note: For fault finding purposes, it is important to know the following: in Pixel Plus and Digital Crystal Clear models, which have an ADC (B18) and Columbus 3D combfilter (B19), the digital input of the scaler is used for the digital video path (Hercules output), whereas the analogue RGB input (analogue input of the scaler) is only used for teletext. This means that no mixed mode (video plus teletext simultaneously) is possible. If there is sound and teletext, but no video and user menu (blank screen), the digital path (Hercules - ADC - Columbus - Scaler) is faulty. If there is sound but no teletext, the back-end part (Scaler - PDP panel) is faulty. In Crystal Clear models, which do not have an ADC and Columbus, the RGB path (analogue input of scaler) is used for both video and teletext.

No TV, but PC is Present

1. Check if Hsync_SDTV and Vsync_SDTV are present at pin 1 & pin13 of 7E03.
2. If they are present, check teletext output.
3. If there is no teletext output, the IC TDA150xx may be defect.

5.7.6 Power Supply

Check Fuse

The power supply (various models are used) contains one fuse near the AC input connector X002.

1. Check with power supply in “off” state by means of ohmic measurement.
2. Fuse X102 may open in case of severe lightning strikes and/or failures in the power supply.
3. Check the standby signal at pin 10 of X200. ON is HIGH, OFF is LOW. During standby mode only the 3V3 is present at pin 10.

Protections Concept on Power Supply Board (two models)

1. **12 V output (pin 8 of X200):** Short-circuit protected by 2.5 A fuse X610. Over-voltage protection when output voltage is more than 40% above nominal value.
2. **Vaudio output (+18 or +24 V, depending on power supply model used); (pin 1 of X200):** Short-circuit proof (+18 V version has 2.5 A fuse X660). Over voltage protection when output voltage is more than 40% above nominal value.
3. **3V3STBY output (pin 3&4 of X200):** Short-circuit proof with auto-restart. Over voltage protection when output voltage is more than 40% above nominal value.
4. **24 V output (for inverter X520 & X530):** Short-circuit proof with auto-restart. Over voltage protection when output voltage is more than 40% above nominal value.

Standby Mode

1. Apply a 12 ohm load resistor of sufficient power rating to all outputs mentioned above (+12 V, +18/ 24 V, +3V3 and +24 V). Connect the STBY pin (pin 10 of X200) to logical “L” (low), i.e. to GND.
2. Over an input voltage range of 90 V_{AC} to 276 V_{AC} only the +3V3 STBY output shall be up.

Normal Mode:

1. Apply a 12 ohm load resistor of sufficient power rating to all outputs mentioned above (+12 V, +18/ 24 V, +3V3 and +24 V). Connect the STBY pin (pin 10 of X200) to logical “H” (high), i.e. to the +3V3 STBY output via a 2,2 k pull up resistor.
2. Over an input voltage range of 90 V_{AC} to 276 V_{AC} all outputs shall be up. The voltage on the +3V3 STBY output shall be 3.3 V over the entire input voltage range. The voltage on the big 400 V capacitor on the power supply should also be 400 V $\pm$ 10%.

Personal Notes:

E_06532_012.eps
131004

6. Block Diagrams, Test Point Overviews, and Waveforms

Wiring Diagram 42” LG

WIRING 42” FHP

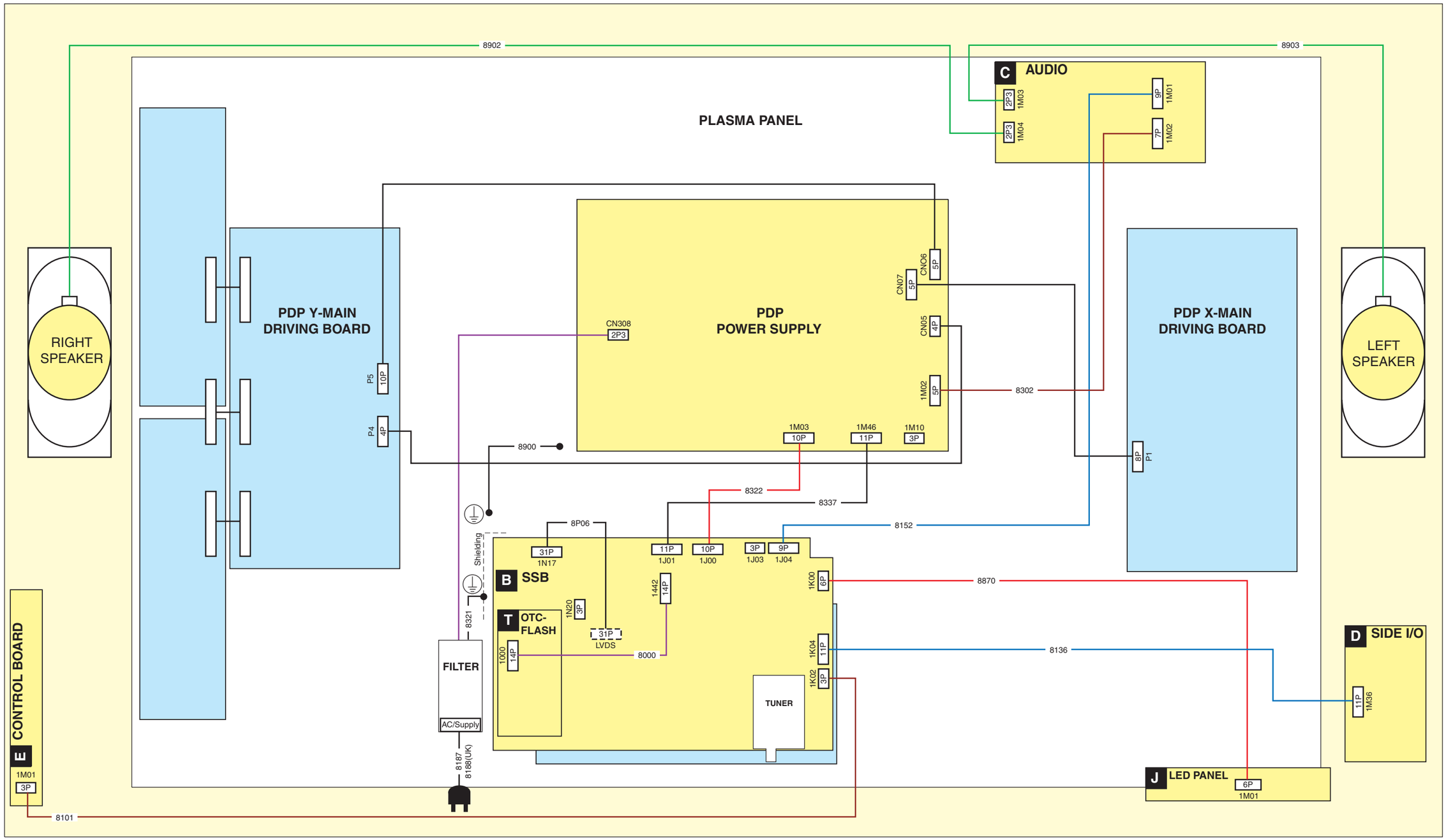

G_16240_005.eps
260906

Wiring Diagram 42” & 50” SDI

WIRING 42” & 50” SDI

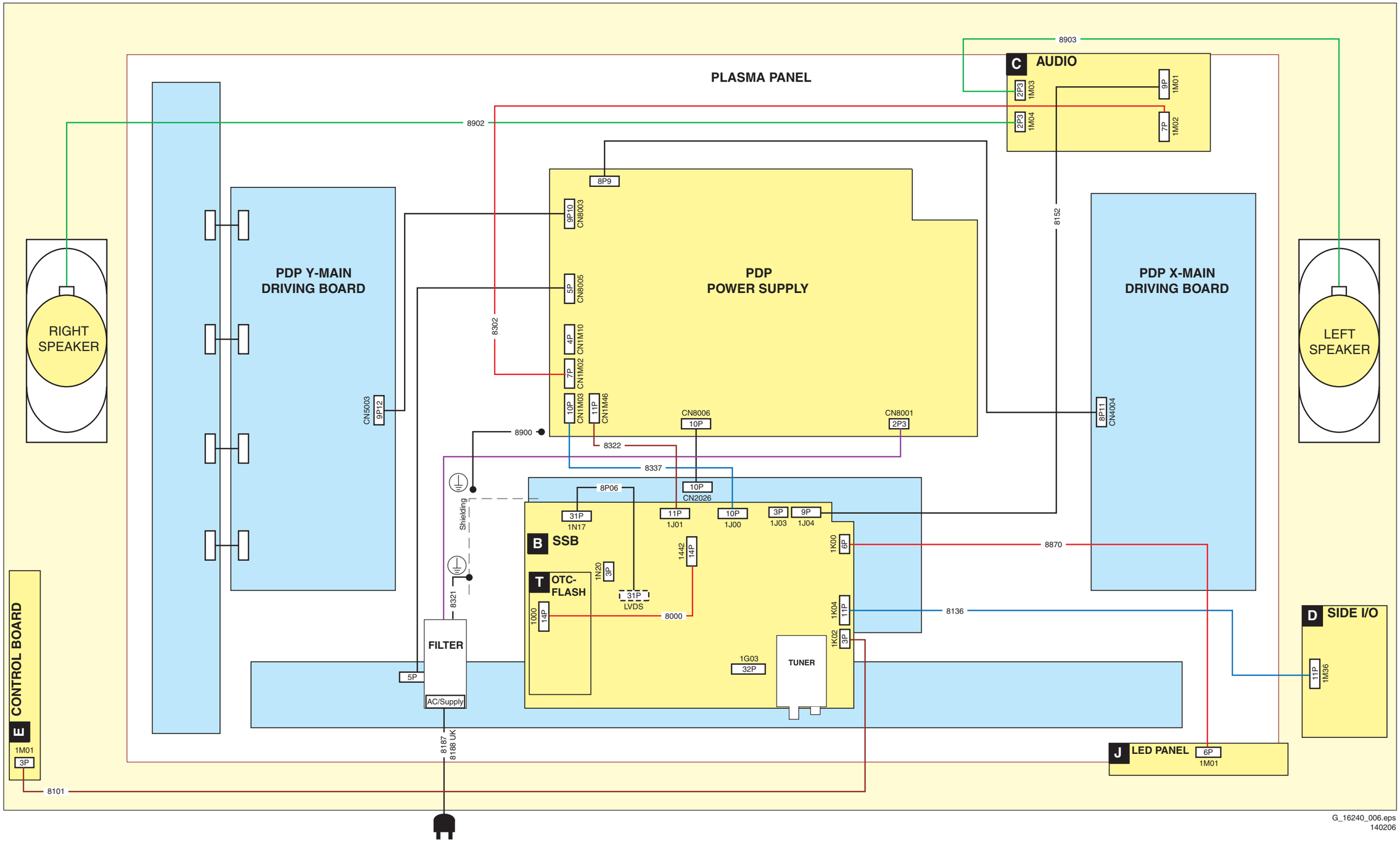

G_16240_006.eps
140206

Block Diagram Supply FHP

SUPPLY 42" FHP

A2 FILTERS STANDBY

MAINS INPUT 95-264Vac
0308
1400 T6.3A
5401 5005 5402
MAINS FILTER
100-230VAC1
100-230VAC2
3450 3451 3452 3036
RELAY CONTROL
1450 1460
ACTIVATING
ACTIVATING DELAY
SUPPLY_ON
A6
400V_HOT
A5
6510 6511 6512 6513
3509 3508 I504 25V_HOT
2505
3506
3507 3035 3026
5500
F500
7500 TNY256P
I508 DRAIN ENIUV SOURCE
I510
6501 6502 6506
6503 6504 F502 +9V_STBY
F503 6505 5503 +5V_STBY_SW
7461 +5V_INT_SW
6507
VCC A7
7540 IN OUT COM +3V3_STBY_SW
I517
3501
7501 TCET1102
1M05
400V_HOT
IBO SUPPLY (RES)
7502
3505 I514
3500
HOT GROUND
COLD GROUND
0311
VCC
+3V3_STBY_SW
VRA
A2 VRS
A6 VCEGO
A3 VSAGO
A3
TO CN11 PDP DISPLAY

A5 PRECONDITIONER

6600 GBU8J
6805 6806
F601
16 5600 14
1 2 4 6
6611
F600 400V_HOT
5612
7610
F608
3608 3606
7608 3610
3663 2663 6661 SW25V_HOT
I613
7661 MC34063D
VCC SWE SWC IS DCOL
3675 2664
5660 6665 BIAS
3677 2662
3609 3605 3603 3604 3660 3661 3659
7650 MC33368P
I620
VCC ZCDET CS FB GATE MULT
F609
7641 7642
F610 3641 I625
7640
6642
400V_HOT
3679 3682
I618
3651 3671 3674

A6 LLC SUPPLY

25V_HOT
3090 3092
7013
7090 7091 7092
PROTECTION
7093 LM317T IN OUT COM
F001
3089
3095 3096 3097
6111
SW25V_HOT
2053
3081 6002 3082
+5V_INT_SW
7003 TCET1102
LATCH
A3
400V_HOT
- CONTROL -
7001 MC34067P
VCC OA OSCCC EAO FI Ip OB In
SOFTSTART CONTROL & CURRENT PROTECTION
F003 F004
5001
7007 7020 HIGH SIDE DRIVE
I038 7005
7008 7021 LOW SIDE DRIVE
I057 7006
F005
5002
5004
3675
3050
I083
1084 T1.0A
5290
6291
DC_PROT
5293 VSND_POS
5291 GND_SND
5292 VSND_NEG
2294 2294
6642
F293 F294
1002
TO 1M02 C PDP AUDIO
6044
F016
70-90V
3072 VTUN
VB
3037
VS 3039 7042
6042
2045 6045
1082 T2.5A
+30V
1083 T2.5A
2029 6021
7010 7011
3057
7002 TCET1102
3022 3080
6029 6012
VRS FEEDBACK
VRS
A2
HOT GROUND
COLD GROUND

A3 PROTECTIONS

- VS PROTECTION -
- VA PROTECTION -
- VCC PROTECTION -
- 12V PROTECTION -
- DC_PROT -
+5V_INT_SW
3308
70-90V
3300 3301 3306 3102 3307
7308 3+4
6312 3312 6313
VA
3311 3313 3317
7308 1+2
6321 3321 6322
VCC
3320 3103 3322 3323
7333 3+4
6333 3333 6334
+12V
3302 3334 3335
7333 1+2
6340 3340 6341
3361 3358 3359
7362 6364 3364
6362 6365
POK
DC_PROT
A7
A6
- 2.5 Vref -
+5V_INT_SW
3304 3324
7304
2V5
+5V_INT_SW
3388 3389
7389
+12V_OVP
RES
+9V_STBY
7375 7376 3373
VSA CONTROL
VSAGO
VSA_CONTROL
A2
A7
+5V_INT_SW
7352 7351 3349
I905
VCEGO
VCC_GO
+5V_INT_SW
7341 7004 7348
LATCH
LATCH
A6
+5V_INT_SW
7363 7366-1
IAK BUFFER
3382 3383
+5V_STBY_SW
7391 7366-4
STANDBY
SUPPLY_ON
A6
1M03
TO 1M03(1J00) B16 PDP DISPLAY
STANDBY
POWER_OK
+5V_INT_SW
7326 7327 3328
8V6 UNDERVOLTAGE PROTECTION
+8V6
6325
POK

A7 AUX SUPPLY

- +12V-SUPPLY -
+30V
1260 T2A
5260
7260 L4973V3.3
REGULATOR VCC OUT VFB
5268
3269 3268
2269
+12V
1M10
TO 1M10 AL AMBI LIGHT OR 1301 K3 IBO ZAPPER
- VA-SUPPLY -
70-90V
1110 T5A
I101
7110
7112 TEA1507P
CONTROL DRAIN VCC ISENCE DRIVER GND DEM CTRL
I105
I106
7117
3118
5121
VA
2121
3107-3109
3117 3116
3113 6113 3115
6111 2114
+5V_INT_SW
+30V
6133
7121 7130
3111
VA Adj.
7120 TCET1102
VRA
VSA_CONTROL
A2
A3
1M46
TO (1J01) 1M46 B16 SSB
+8V6
VCC
+5V_STBY_SW
VTUN
+12V
+9V_STBY
- VCC-SUPPLY -
1200 T2A
5220
3206 3208
7212 TEA1507P
CONTROL DRAIN CTRL DEMAG DRIVE VCC GND
I213
7200
I214
I236
7217
3149 3218
6226
5225 VCC
5229
6230
7230 IN OUT COM +8V6
VCC_GO
A6
3202
I208
7202
3214 6213 3213 3220
6211
I220
6202 3203
F116
3228
3229 3224
7220 TCET1102
7502
6142
VA
7050
VS
I200 6050
3084
+5V_INT_SW
POK
SEQUENCE DISCHARGE
I202
7052
I201
3053
VS
2021
0323
VA VCC VS
TO CN23 PDP DISPLAY
0342
VA VCC VCC
TO CN42 PDP DISPLAY (RES)
0352
VA VCC
TO CN52 PDP DISPLAY (RES)

F_16040_022.eps
140606

Block Diagram Video

VIDEO

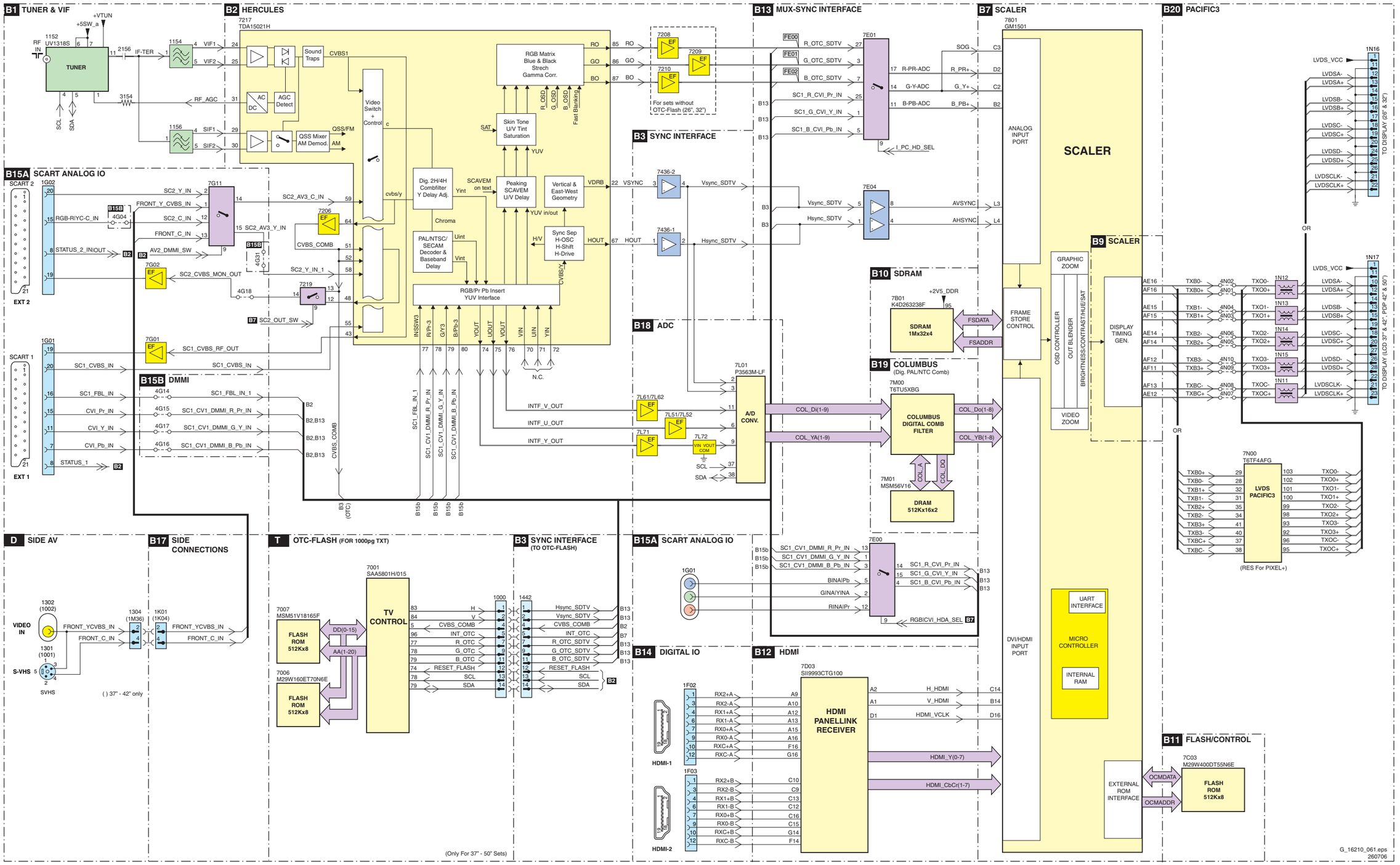

Block Diagram Audio

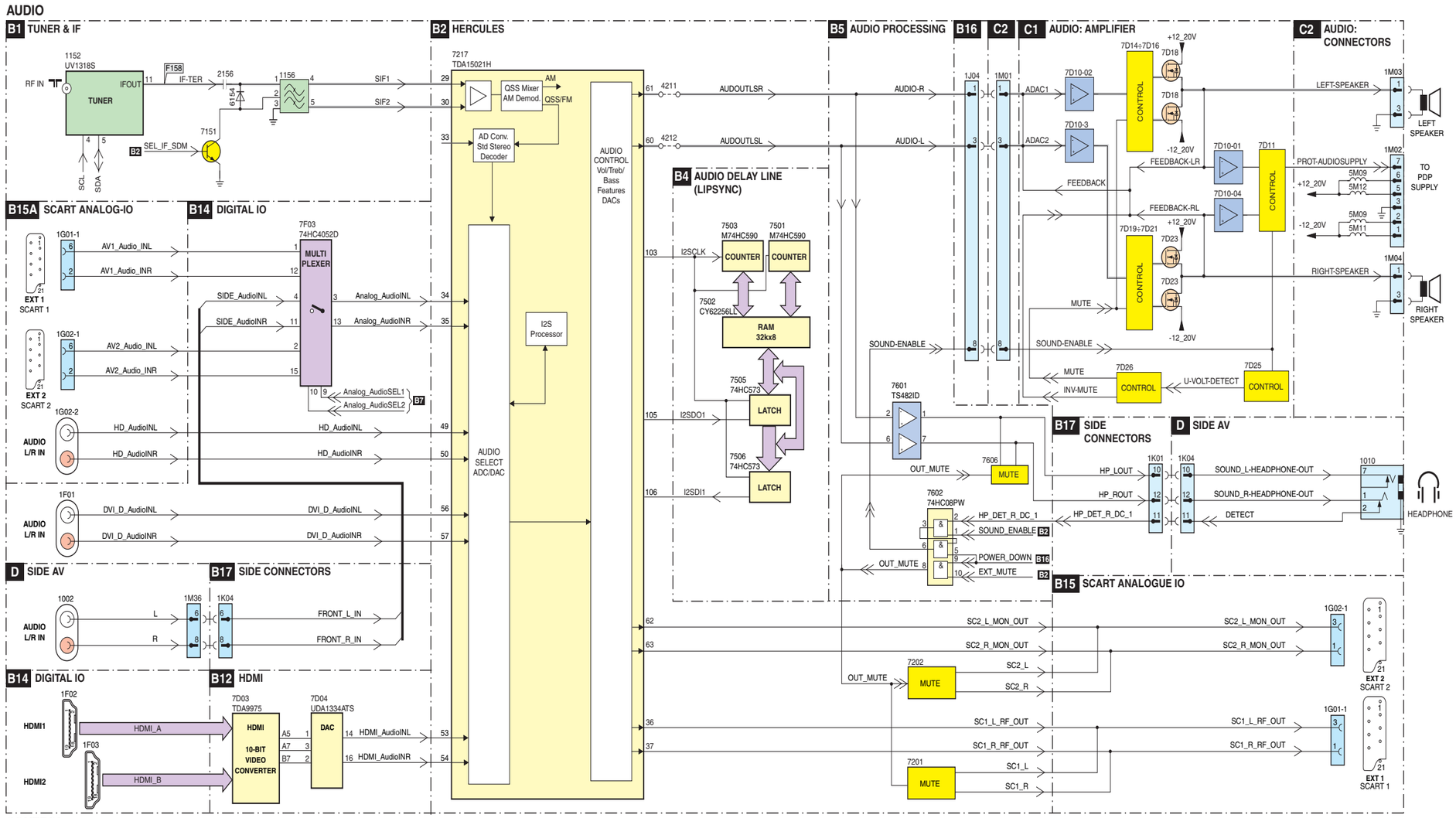

Test Point Overview Small Signal Board

F151	D2	F166	E2	F210	D4	F224	B3	F238	C3	F252	C2
F152	F2	F167	E2	F211	B3	F225	B3	F239	C2	F253	C2
F154	F2	F175	F2	F212	B2	F226	B4	F240	C2	F254	C2
F155	F2	F176	F3	F213	B2	F227	C4	F241	C3	F255	C4
F156	E2	F177	F3	F214	B3	F228	B4	F242	C3	F256	C4
F157	E2	F201	A3	F215	B3	F229	C3	F243	C3	F257	C4
F158	D2	F202	A2	F216	C4	F230	B4	F244	C2	F258	A3
F159	D2	F203	A3	F217	A3	F231	B3	F245	B2	F262	C4
F160	C2	F204	C3	F218	B3	F232	B4	F246	C2	F263	C4
F161	C2	F205	C3	F219	A3	F233	C4	F247	B2	F264	C4
F162	C2	F206	C3	F220	B4	F234	C4	F248	C3	F404	B4
F163	E3	F207	C2	F221	B4	F235	C4	F249	B2	F405	B4
F164	F2	F208	C3	F222	C3	F236	D3	F250	C4	F406	A4
F165	E2	F209	C3	F223	B2	F237	C3	F251	C2	F407	B4

F408	B4	F605	B2	F803	C7	FC00	C7	FD03	E10	FE00	E7
F409	A4	F700	A8	F804	C7	FC01	C7	FD04	E10	FE01	E8
F410	B4	F701	B7	F900	D8	FC02	C7	FD05	E9	FE02	E8
F411	C4	F710	B7	F901	D7	FC03	C7	FD06	E9	FE03	E7
F412	C4	F717	B6	F902	D8	FC04	D6	FD07	E10	FE04	D6
F501	B3	F736	A4	F903	D7	FC05	D7	FD08	E10	FE05	E8
F502	B3	F737	B4	F904	D7	FC06	C6	FD09	E10	FE06	E7
F503	B2	F738	B4	F905	C8	FC07	C6	FD10	D9	FE07	D10
F504	B3	F743	B4	F906	C8	FC08	C6	FD11	E9	FE08	E7
F505	B4	F754	B7	F907	C7	FC09	C6	FD12	D10	FE10	E8
F601	A2	F755	B8	F908	D7	FC10	C6	FD13	D9	FE11	D7
F602	A2	F800	C10	F909	D7	FC11	C6	FD14	E10	FE12	D7
F603	B2	F801	D8	F910	C8	FD01	E10	FD15	E9	FE13	E8
F604	B2	F802	D7	FB01	C10	FD02	E10	FD17	E10	FF01	E9

FF02	F3	FF16	F10	FG03	F5	FG19	F7	FG38	E5	FG56	E5
FF03	F9	FF17	F10	FG04	F5	FG20	E7	FG39	E5	FJ00	A7
FF04	E10	FF18	F10	FG05	F6	FG21	F7	FG40	F10	FJ01	A6
FF05	F10	FF19	F10	FG07	F4	FG22	F7	FG41	E5	FJ02	A5
FF06	F9	FF20	F10	FG08	E4	FG24	F7	FG42	F4	FJ03	A6
FF07	F9	FF21	F10	FG10	E4	FG26	E7	FG43	E5	FJ04	A6
FF08	F10	FF22	F10	FG11	E4	FG27	E6	FG44	F8	FJ05	A6
FF09	F10	FF23	F10	FG12	F4	FG28	E6	FG45	E5	FJ06	A5
FF10	F9	FF24	F10	FG13	E4	FG32	E5	FG47	E5	FJ07	A6
FF11	F9	FF25	F10	FG14	E3	FG33	E4	FG48	E5	FJ08	A5
FF12	E9	FF26	F10	FG15	E3	FG34	E4	FG49	E5	FJ09	A3
FF13	F9	FG00	E5	FG16	F7	FG35	E5	FG51	E5	FJ10	A3
FF14	F10	FG01	E5	FG17	E7	FG36	E6	FG53	E5	FJ11	A2
FF15	F6	FG02	E8	FG18	E9	FG37	F6	FG54	E5	FJ12	A2

FJ13	A2	FJ27	A10	FK00	C1	FL03	C4	FN13	B10	FN38	A10
FJ14	A2	FJ28	A3	FK01	C1	FL04	C5	FN15	B9	FN39	A10
FJ15	A10	FJ29	A2	FK02	C1	FM01	D5	FN16	B9	FN40	B9
FJ16	A10	FJ30	A7	FK03	C1	FM02	D5	FN17	B9	FN41	B10
FJ17	A10	FJ31	A6	FK04	C1	FM03	D5	FN18	B9	FN42	B10
FJ18	A10	FJ32	A4	FK05	D1	FM04	D5	FN19	B9	FN43	B10
FJ19	A10	FJ33	A7	FK06	D1	FM05	D5	FN20	B9	FN44	A10
FJ20	A10	FJ34	A5	FK07	D1	FN01	B9	FN24	B10	FN46	A10
FJ21	A7	FJ35	A5	FK08	D1	FN02	A9	FN25	B9	FN47	A10
FJ22	A7	FJ36	A5	FK09	D1	FN03	B9	FN32	B8	FN48	A10
FJ23	A7	FJ37	A5	FK10	D1	FN09	B9	FN33	B8	FN49	A10
FJ24	A7	FJ38	A5	FK11	B1	FN10	B8	FN34	A9	FN50	A10
FJ25	A7	FJ39	A6	FL01	C5	FN11	B9	FN35	B9	FN51	B10
FJ26	A7	FJ40	A5	FL02	C5	FN12	A9	FN36	B10	FN52	B10

FN53	B10	I201	A2	I215	B3	I230	B4	I244	C4	I267	C4	I288	C3
FN54	B10	I202	A2	I217	C4	I231	C3	I246	B4	I268	B4	I289	A2
FN55	B10	I203	C2	I218	B4	I232	B2	I247	B4	I269	B2	I290	A3
FN56	B10	I204	C3	I219	B4	I233	C3	I248	B4	I270	C4	I291	A2
FN57	B10	I205	C3	I220	C4	I234	C2	I254	D4	I271	B4	I292	A2
FN58	B9	I206	C3	I221	B2	I235	B2	I255	B4	I272	C4	I293	A3
FN59	B10	I207	C3	I222	B3	I236	B2	I256	B4	I273	C2	I294	A2
I151	E2	I208	C3	I223	B2	I237	B2	I257	B4	I274	B2	I297	B1
I152	E2	I209	C3	I224	B4	I238	B2	I258	C3	I275	A3	I298	C4
I153	D2	I210	B3	I225	B3	I239	B4	I259	C4	I277	B4	I430	A2
I154	D3	I211	B3	I226	C3	I240	B4	I262	B2	I278	B4	I440	D4
I155	D2	I212	B3	I227	C3	I241	A3	I264	B2	I283	C3	I443	C4
I156	E2	I213	B3	I228	B4	I242	A3	I265	C4	I284	C3	I449	B4
I157	E2	I214	C3	I229	C3	I243	B4	I266	C4	I285	C4	I450	B4

I451	B4	I907	D7	IG12	E5	IL12	C5
I452	A3	I908	C7	IG13	E3	IL13	C5
I453	B2	IA00	D8	IG14	E7	IL14	C5
I454	B1	IA03	B6	IG15	E7	IL15	C4
I455	D4	IA05	D8	IG16	E6	IL17	C5
I501	A3	IA06	D8	IG17	E6	IL18	C5
I502	A4	IA07	D8	IG18	F8	IL19	C5
I503	A3	IA08	B7	IG19	F7	IL20	C5
I504	A3	IA09	C8	IG20	E8	IL21	C5
I505	A3	IA10	C7	IG21	E7	IL22	C5
I506	A3	IB02	C9	IG22	E4	IL23	B4
I507	A3	IB03	C9	IG23	E4	IL24	C5
I602	A2	ID00	D10	IG24	E6	IL25	C5
I603	A2	ID01	E9	IG25	E5	IL26	C5
I604	A2	ID08	E9	IG26	F7	IL27	C5
I605	A2	ID09	D10	IG27	F6	IL28	C5
I606	B2	ID10	E9	IG28	E4	IL29	C5
I607	B2	ID11	D10	IG29	E6	IL30	C5
I608	A2	ID13	E9	IG30	E4	IL31	C5
I610	A2	ID14	D8	IG31	E6	IL32	C5
I611	B2	ID15	E10	IG32	E5	IL33	E4
I612	B2	ID18	E10	IG33	E7	IL34	D4
I613	B2	ID19	E10	IG34	F4	IL35	D4
I614	B2	ID20	E10	IG35	E4	IL36	D4
I615	B2	ID22	E10	IG36	E4	IL37	E4
I616	B2	ID24	E10	IG37	F4	IL38	C5
I617	A3	ID25	D10	IG38	E6	IL39	C5
I618	A2	ID28	E9	IG39	E6	IL40	C4
I619	B2	IE00	E7	IG40	E8	IM00	D5
I620	D3	IE01	E8	IG41	E6	IM01	D5
I621	B1	IE02	E8	IG42	F8	IM02	D5
I701	A5	IE03	D8	IG43	E6	IM03	D6
I702	A4	IE04	E7	IG44	E6	IM04	D5
I704	B7	IE05	E7	IG45	E6	IM05	D5
I705	A5	IE06	E7	IG46	F8	IM06	D6
I706	A6	IE07	E7	IG47	E8	IM07	D5
I708	A6	IE08	E7	IG48	F7	IM08	D4
I709	A6	IE09	E7	IG49	F7	IM09	E5
I710	A6	IE10	E8	IG50	F6	IM10	D5
I711	B6	IE11	E8	IG51	E6	IM11	D5
I712	B6	IE12	E8	IG52	E7	IM12	D4
I714	B6	IE13	E7	IG53	E4	IM13	D4
I715	B6	IE14	E7	IG54	E4	IM15	D5
I716	B6	IE15	E7	IG55	E4	IM16	D5
I717	B6	IE16	E7	IG56	E4	IM17	D5
I718	B6	IE17	E7	IG57	E6	IM18	D5
I719	A6	IE18	E7	IG58	E6	IM20	D5
I720	B6	IE19	E7	IG59	E5	IN01	A8
I721	B6	IE20	E8	IG60	E3	IN02	A8
I722	B6	IE21	E7	IG61	E5	IN03	A8
I723	B6	IE22	E8	IG62	E5	IN04	A9
I724	B6	IE23	E8	IG63	E5	IN05	A9
I725	B6	IE24	E7	IG64	E5	IN06	A10
I726	B6	IE25	E8	IG65	E6	IN07	A10
I731	B5	IE26	E8	IG66	E5	IN08	A10
I732	B5	IE27	D7	IG67	E6	IN09	B9
I733	A5	IE28	E8	IG68	F6	IN10	B9
I734	A4	IE29	E7	IG69	E4	IN11	B10
I735	A4	IE30	E7	IG70	E8	IN12	B10
I736	B5	IE32	D7	IG71	F6	IN13	B10
I740	B5	IE33	D7	IG72	E6	IN14	B10
I741	B5	IE34	D7	IG73	E8	IN15	B10
I742	B5	IE35	E8	IG74	E6	IN16	B8
I747	B7	IE36	E8	IG75	F8	IN17	B8
I748	B7	IE37	E8	IG76	F8	IN18	B8
I753	B7	IE38	E8	IG77	E8	IN19	B8
I754	B7	IE39	E8	IG78	F8	IN20	A10
I755	B7	IE40	E7	IG79	E8		
I756	B7	IE42	E8	IG80	F8		
I757	B7	IE43	E6	IG82	F8		
I758	B7	IE44	D6	IG83	F8		
I760	B8	IE45	E7	IJ01	A4		
I762	A5	IE46	D7	IJ02	A4		
I764	B7	IE47	E8	IJ03	A4		
I800	C6	IE48	E8	IJ04	A4		
I801	D7	IE49	E8	IJ05	A5		
I802	C7	IE50	E7	IJ06	A4		
I803	C7	IF01	E9	IJ07	A3		
I804	D8	IF02	F9	IJ08	A5		
I805	C6	IF03	F9	IJ09	A4		
I806	C7	IF04	F9	IJ10	A4		
I807	D7	IF05	E5	IJ11	A4		
I808	D7	IF06	E3	IJ12	A3		
I809	C7	IF08	E3	IJ13	A4		
I810	C7	IF09	E4	IJ14	A4		
I811	D10	IF10	E4	IJ15	A8		
I812	D8	IF12	E4	IK00	B1		
I813	C10	IF13	E3	IK01	B1		
I815	D8	IF14	E4	IK02	B1		
I816	D8	IF16	F9	IK03	B1		
I817	D8	IF17	F9	IK04	B1		
I818	D6	IF18	F10	IK05	B1		
I819	C7	IG00	E3	IK16	B1		
I820	C8	IG01	E5	IK17	C1		
I822	C7	IG02	E5	IK18	D1		
I823	D8	IG03	E5	IL01	C4		
I824	C7	IG04	E5	IL02	C5		
I900	C10	IG05	E4	IL03	C5		
I901	C8	IG06	E4	IL05	D4		
I902	D8	IG07	E4	IL06	D5		
I903	D8	IG08	F3	IL07	D4		
I904	C8	IG09	E4	IL09	C4		
I905	D8	IG10	E3	IL10	B4		
I906	D7	IG11	E4	IL11	C5		

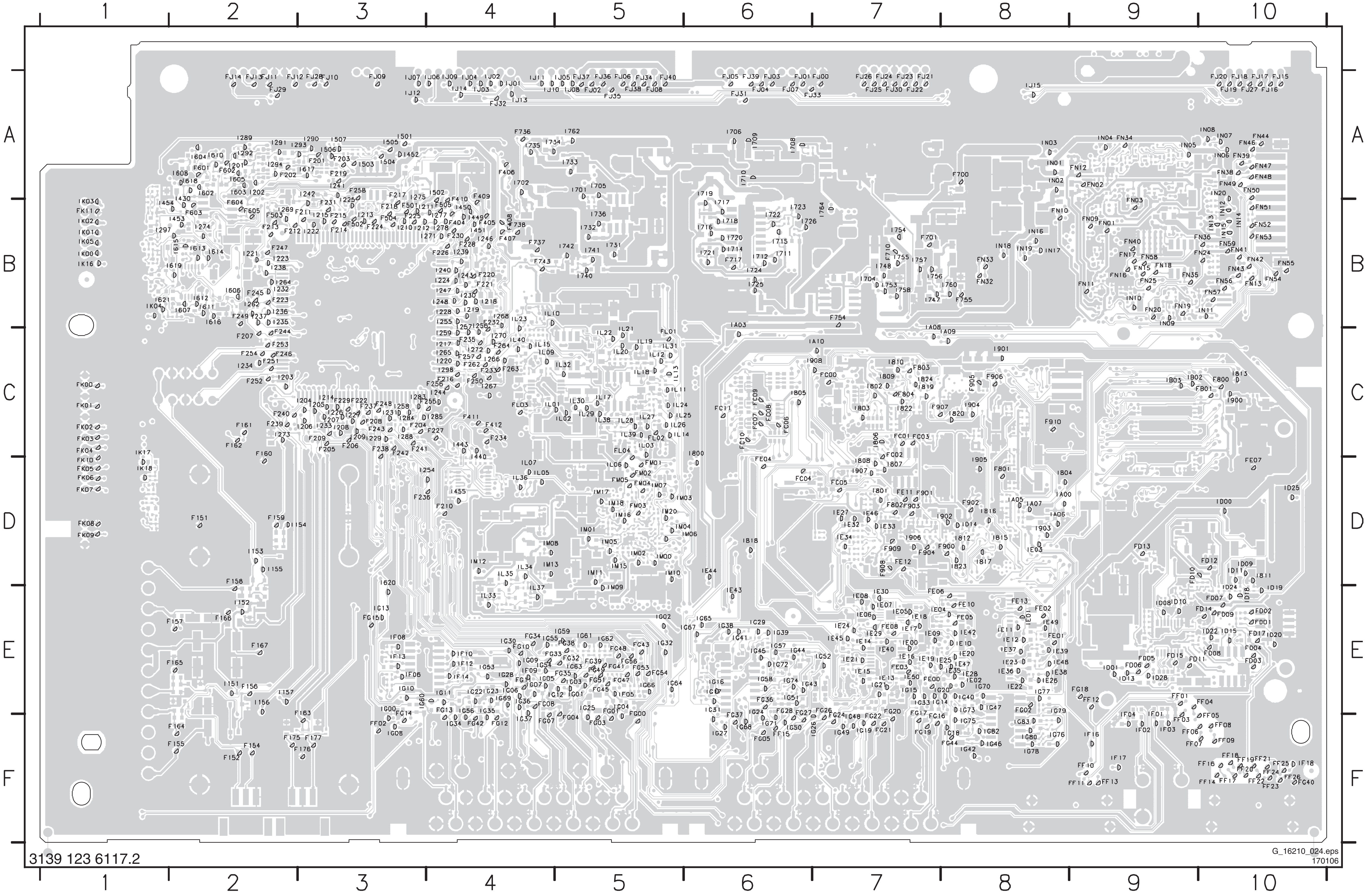

I²C Overview

I²C

B2 HERCULES

7217 TDA15021H

HERCULES SET PROCESSOR

109 108 104 NVM_WP_HERC 122 SC_STANDBY

+3V3STBY +3V3SW

3233 3232 3298 3297 3248 3247 3249

ERR 6

7221 7220

7207 M24C16 EEPROM NVM

ERR 9

B8 SCALER

SDA SCL

3902 3901 3904 3903

7801 GM1501H SCALER

ERR 4

B1 TUNER & IF

3102 3101 3152 3151

1102 UV1318S TUNER

ERR 10

1151 SERVICE CONNECTOR COMPAIR

B19 COLUMBUS

3M14 3M15

7M00 T6TU5XBG COLUMBUS CTRL

ERR 11

B3 SYNC INTERFACE

1442 1000

T OTC-FLASH

3016 3015

7001 SAA5801H/ TV CONTROL

ERR 15

B18 ADC

3L19 3L18

7L01 P3563M ADC

ERR 7

(Only For 37" - 42" Sets)

B7 SCALER

M1 UART_TX 3172

M2 UART_RX 3173

3170 3171

1177 SERVICE CONNECTOR UART

B6 DC-DC CONVERTER

7758 3759 3750 7756

B11 FLASH / CONTROL

P3 P4 SDA_IO SCL_IO

3818 3817

7C01 M24C32 EEPROM

ERR 8

AF5 NVM_WP_SCALER 7

B12 HDMI

3D05 3D06 75 74

7D03 TDA9975 HDMI PANELLINK RECEIVER

ERR 13

K16 K15 J16 J15

3D09 3D01 3D10 3D03

+5VHDMI_A +5VHDMI_B

7D01 M24C02 EEPROM 256x8

7D00 M24C02 EEPROM 256x8

1F02 1F03

DOC_SDAA DOC_SCLA DOC_SDAB DOC_SCLB

2x HDMI CONNECTOR

B14 DIGITAL I/O

B20 PACIFIC3

4N30 4N31 SDA_PF3 SCL_PF3

198 200

7N00 T6TF4AFG PACIFIC3 MISC

ERR 16

3N21 3N20

1N04 SDA SCL

FOR DEVELOPMENT USE ONLY (N.S.)

1N03

202 SSDA 204 SSCL

FOR PACIFIC3 PROGRAMMING (N.S.)

192 SPI_SO 191 SPI_SCK 194 SPI_CS 188 SPI_WP 187 SPI_RST 193 SPI_SI

7N02 M25P05 Flash 512k

B15B DMMI

112 SWHW_I2C_SDA 113 SWHW_I2C_SCL

1G03

ERR 17

Reserved for DMMI

B10 SDRAM

+3V3_IO

3838 3837

AF7 JTAG_TDI_SDA AD6 JTAG_CLK_SCL

1802 JTAG I2C

ADDRESS FSADDR DATA FSDATA

7B01 K4D263238F SDRAM

ERR 14

ADDRESS OCMADDR DATA OCMDATA

7C03 M29W400D ERROM

B9 SCALER INTERFACE

7A00 PCA9515ADP RES

4A01 4A00

SDA_DMA_BUS1_DISP SDA_DMA_BUS1_DISP

1N17 (1G50)

TO DISPLAY

FOR PDP ONLY (Depending on screen manufacturer)

(OPTIONAL PIXEL+)

G_16210_063.eps
260906

Supply Voltage Overview

SUPPLY LINE OVERVIEW

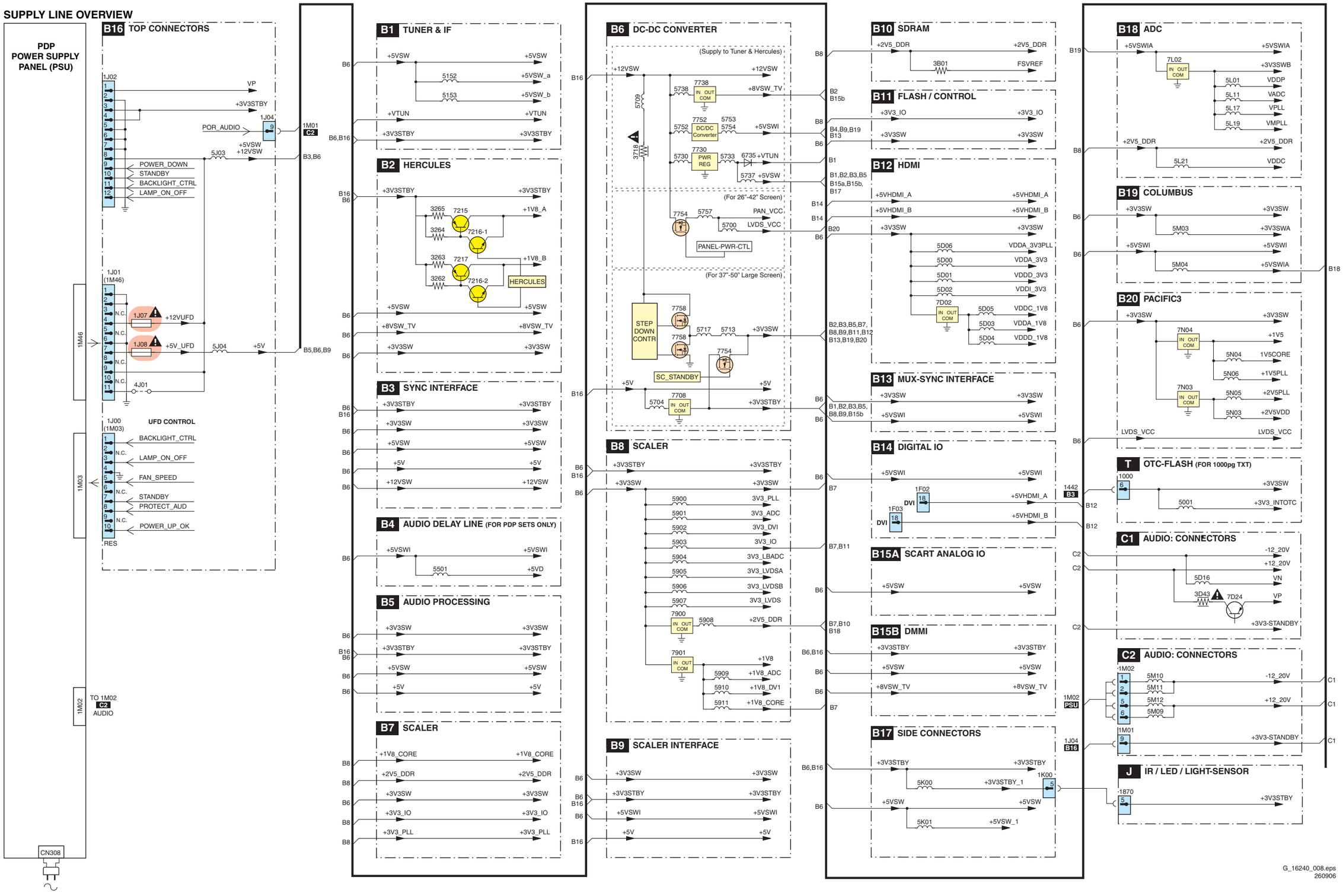

G_16240_008.eps
260906

7. Circuit Diagrams and PWB Layouts

PDP FHP Supply: Filter Standby

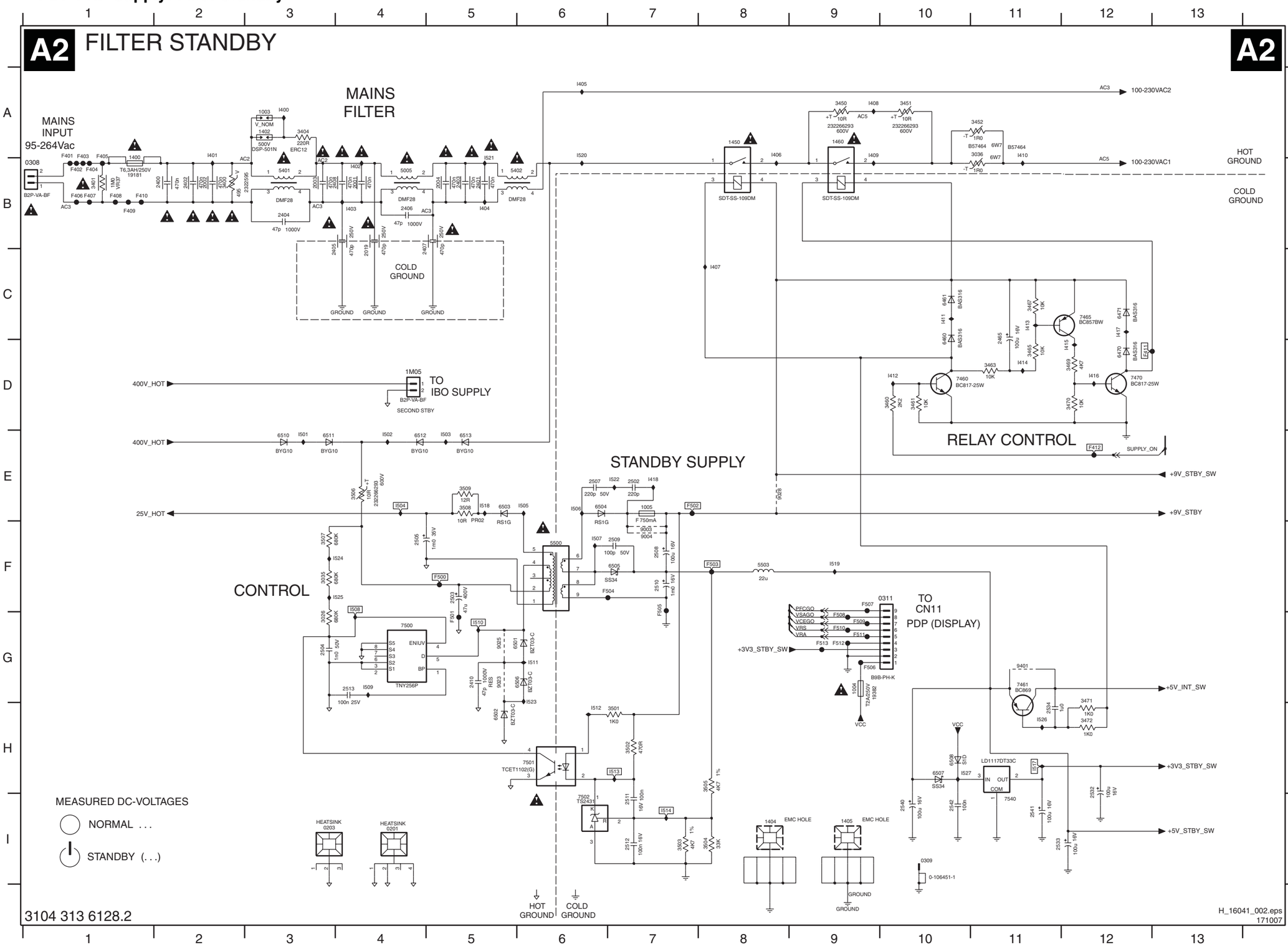

0201 I4 7465 C12
0203 I3 7470 D12
0308 B1 7500 G4
0309 I10 7501 H6
0311 F10 7502 I6
1003 A3 7540 I11
1004 G9 9003 F7
1005 E7 9004 F7
1400 B1 9023 G5
1402 A3 9025 G5
1404 I8 9028 E8
1405 I9 9401 G11
1450 A8 F401 A1
1460 A9 F402 B1
1M05 D4 F403 B1
2001 B4 F404 B1
2002 B2 F405 B1
2003 B3 F406 B1
2004 B5 F407 B1
2019 C4 F408 B1
2400 B2 F409 B1
2401 B5 F410 B1
2402 B2 F411 D12
2403 B5 F412 E12
2404 B3 F500 F5
2405 C4 F501 G5
2406 B4 F502 E7
2407 C5 F503 F8
2408 B4 F504 F7
2410 G5 F505 F7
2465 C11 F506 G9
2502 E7 F507 F9
2503 F5 F508 G9
2504 G3 F509 G9
2505 F4 F510 G9
2507 E6 F511 G9
2508 F7 F512 G9
2509 F7 F513 G9
2510 F7 I400 A3
2511 I7 I401 A2
2512 I7 I402 B4
2513 G4 I403 B4
2532 H12 I404 B5
2533 I11 I405 A6
2534 H11 I406 A8
2540 I10 I407 C8
2541 I11 I408 A9
2542 I10 I409 A9
3026 G3 I410 A11
3035 F3 I411 C10
3036 A11 I412 D10
3400 B2 I413 C11
3401 B1 I414 D11
3404 A3 I415 D12
3450 A9 I416 D12
3451 A10 I417 C12
3452 A11 I418 E7
3460 D10 I501 E3
3461 D10 I502 E4
3463 D11 I503 E5
3465 D11 I504 E4
3467 C11 I505 E6
3469 D12 I506 E6
3470 D12 I507 F6
3471 G12 I508 F4
3472 H12 I509 G4
3501 H7 I510 G5
3502 H7 I511 G6
3503 I7 I512 H6
3504 I8 I513 H7
3505 H8 I514 I7
3506 E4 I517 H11
3507 F3 I518 E5
3508 E5 I519 F9
3509 E5 I520 A6
5005 B4 I521 A5
5401 B3 I522 E7
5402 B5 I523 G6
5500 F6 I524 F4
5503 F8 I525 F4
6460 C10 I526 H11
6461 C10 I527 H10
6470 D12
6471 C12
6501 G6
6502 H5
6503 E5
6504 E6
6505 F7
6506 G6
6507 H10
6508 H10
6510 E3
6511 E3
6512 E4
6513 E5
7460 D10
7461 G11

PDP FHP Supply: Protection

1M03 A15 2304 D1 2305 D1 2306 D3 2322 D4 2324 E6 2343 E8 2350 D9 2352 E9
2364 E11 2366 F15 2376 G2 2377 G10 2381 H1 2385 F5 2386 G4 2387 G5 2388 G6
2389 H1 2390 G2 2397 C13 2398 C1 3068 F10 3074 G10 3102 E1 3103 C4 3300 B1
3301 C1 3304 D1 3306 D1 3307 E1 3308 C2 3311 C3 3312 C3 3313 D3 3317 E3
3318 C4 3319 G2 3320 B4 3321 C4 3322 D4 3323 E4 3324 D1 3325 G12 3326 G12
3327 G13 3328 F13 3329 G2 3330 G1 3332 C6 3333 C6 3334 D6 3335 E6 3340 C7
3341 C7 3342 D7 3343 E7 3344 D8 3345 C8 3346 C8 3347 D8 3348 C8 3349 C9
3350 D9 3351 D9 3352 E9 3353 E10 3354 E9 3355 D13 3356 D14 3357 D14 3358 D14
3359 D14 3360 D10 3361 C10 3362 D15 3363 E10 3364 E11 3366 D12 3367 D12
3368 D13 3369 D13 3370 D13 3373 F1 3374 F2 3376 G2 3377 G1 3378 H2 3380 H2
3381 H2 3383 E15 3384 F15 3386 G4 3388 F8 3389 F9 3390 G5 3391 F11 3392 G3
3393 G4 3395 G5 3396 G5 3397 F5 3398 F5 3399 F6 3806 G10 3807 H12 3808 G10
3809 F10 3811 F11 6312 C2 6313 D2 6321 D4 6322 D4 6325 F12 6333 C5 6334 D5
6335 G11 6340 C7 6341 D7 6344 D8 6347 C8 6362 D10 6364 D11 6365 E12 6366 G11
6367 F7 6375 F1 6376 G1 6378 F14 7004 D8 7304 D1 7308-1 D4 7308-2 D4 7308-3 D2
7308-4 D2 7326 G13 7327 F14 7330-1 D6 7330-2 D6 7330-3 D5 7330-4 D5 7341 C8
7348 D8 7351 D10 7352 D9 7362 D11 7363 G4 7365 G2 7366-1 F6 7366-2 E14
7366-3 D12 7366-4 F11 7375 F1 7376 H1 7389 F9 7391 F12 9005 C1 9006 B13
9020 B14 F311 G5 F312 D4 F318 G8 F319 H2 F320 H1 F322 H2 F323 H1 F325 D13
F326 D2 F327 D4 F328 D5 F329 D7 F330 C1 F335 C12 F343 D7 F368 C3 F370 A14
F371 A15 F372 B14 F374 B15 F375 B14 F376 B15 F377 B14 F378 B15 F379 B13
F380 B14 F381 F13 F390 F9 F937 D14 I301 G4 I302 C2 I303 F1 I304 D1 I306 E1
I307 E1 I308 F2 I310 G1 I311 H2 I313 B1 I316 D3 I318 C8 I319 D8 I320 D10
I321 D11 I322 D4 I323 D12 I326 G13 I327 F13 I330 D4 I332 C6 I335 D6 I336 D9
I339 E11 I341 D7 I343 D7 I344 D8 I345 D8 I347 D8 I348 D8 I349 C9 I350 D9
I351 D9 I352 D9 I363 D11 I364 D11 I379 E14 I380 E15 I381 F10 I382 F1
I383 D1 I384 C4 I385 F5 I386 F6 I387 F6 I389 F8 I390 B13 I392 G1 I393 G4
I394 G5 I905 G8 I906 H2 I935 F12 I936 D14 I939 F10 I942 G10 I943 G1
I944 G2 I945 G2

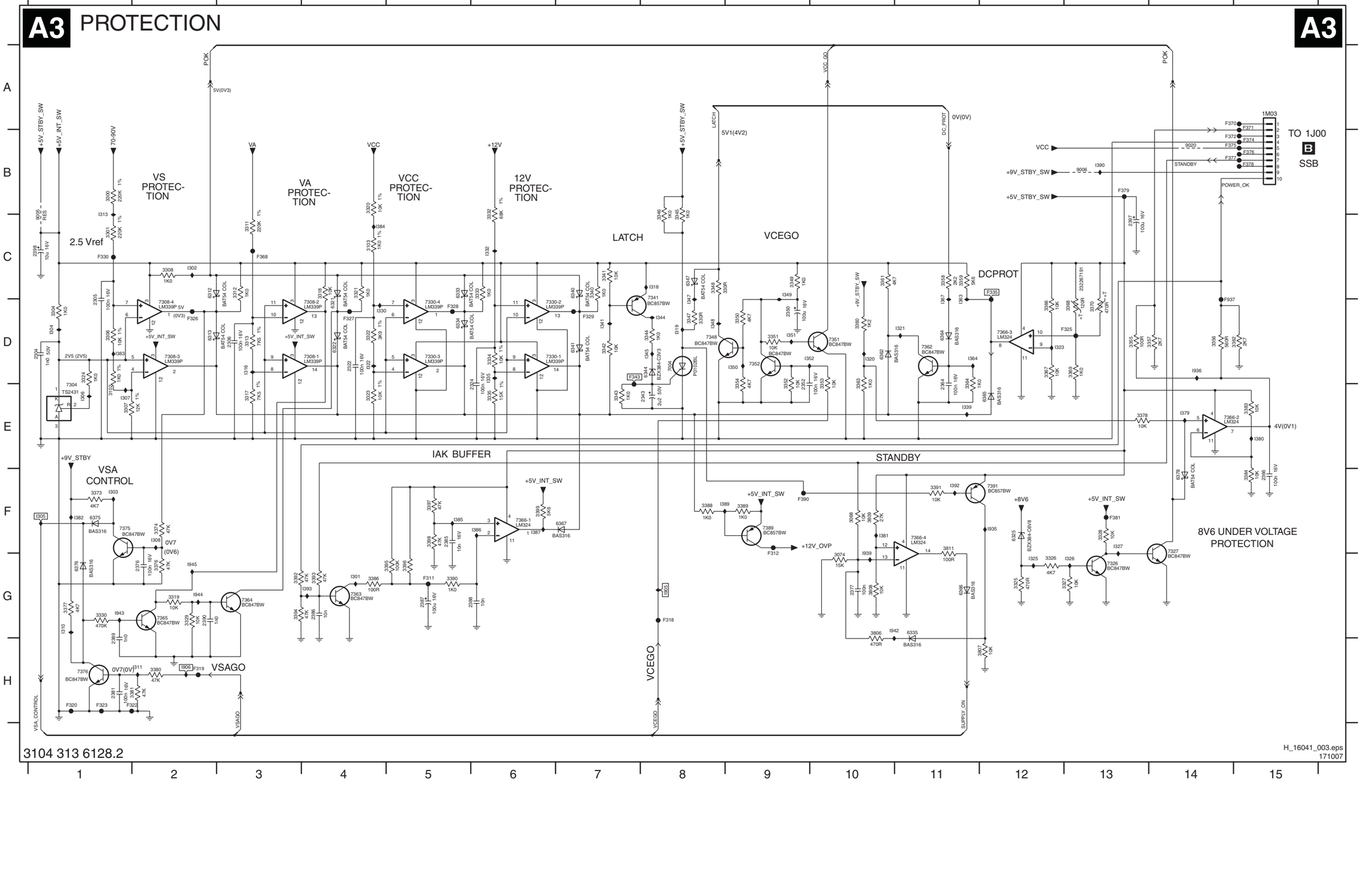

PDP FHP Supply: Pre Conditioner

A5 PRECONDITIONER

A5

PRECONDITIONER

PRECONDITIONER CONTROL

100-230VAC2

100-230VAC1

COLD GROUND

HOT GROUND

MEASURED DC-VOLTAGES

NORMAL . . .

STANDBY (. . .)

400V_HOT

SW25V_HOT

BIAS

15V(1V8)

32V (0V)

5V (0V)

2600 B3	3690 I7	I643 G7
2601 B2	3691 I7	I644 G8
2602 C6	3692 I7	I645 G8
2603 C3	3693 I6	I646 G8
2604 C2	3999 A10	I647 F3
2605 C3	5600 A5	I648 H12
2608 H8	5601 B8	I649 G6
2610 B7	5612 B7	I650 E3
2611 B8	5660 E10	I651 E3
2612 B5	6600 B2	I652 G5
2613 C6	6601 F3	I653 F5
2614 C6	6602 G6	I654 C5
2616 C9	6605 A3	I655 C7
2617 C9	6606 A2	I656 E8
2640 H8	6608 B6	I657 G12
2642 G11	6609 C7	I658 H12
2651 H3	6611 B8	I659 G12
2653 H5	6640 G11	I660 G12
2654 H1	6641 H10	I661 G12
2655 H3	6642 H11	I662 H12
2656 H2	6643 H9	I663 G1
2660 E10	6651 H5	I664 I6
2661 F8	6652 H4	I665 I7
2662 F11	6653 H5	I666 I6
2663 E6	6654 G1	I667 I7
2664 E7	6660 F7	I668 I7
2665 H8	6661 E7	
2666 H4	6663 E10	
2670 H12	6665 E11	
2671 H12	6666 H7	
2672 H8	7601 G8	
2673 G12	7602 F8	
2674 G12	7608 C6	
2675 G11	7610 B7	
2676 G12	7640 H9	
2677 C7	7641 G10	
2690 I6	7642 G11	
2691 I7	7650 G6	
3104 H12	7654 H2	
3601 D2	7655 I7	
3602 D2	7656 I6	
3603 E3	7661 D8	
3604 E3	F600 B10	
3605 F3	F601 B3	
3606 C5	F602 D2	
3607 F3	F604 C10	
3608 C5	F605 D10	
3609 D3	F606 I10	
3610 C6	F608 D11	
3611 C6	F609 F9	
3612 H4	F610 G9	
3613 G8	F996 A10	
3614 C7	F997 A10	
3615 C8	F998 A11	
3616 G9	F999 A11	
3617 G7	I601 C7	
3618 G7	I602 D2	
3619 F8	I603 B4	
3620 C8	I604 B7	
3621 C8	I605 B5	
3622 C9	I606 C6	
3623 G6	I607 C6	
3639 H8	I608 B7	
3640 H8	I609 C8	
3641 H9	I610 E5	
3642 G11	I611 E6	
3643 F11	I612 E7	
3651 H3	I613 E7	
3652 G5	I614 B8	
3654 G1	I615 H1	
3655 H1	I616 G5	
3656 H1	I617 G2	
3659 G5	I618 H4	
3660 F5	I619 H4	
3661 F5	I620 H5	
3662 E6	I621 G4	
3663 E6	I622 G7	
3664 H12	I623 H8	
3665 F9	I624 H9	
3666 H4	I625 G10	
3667 H6	I626 H10	
3668 F10	I627 F12	
3669 H12	I628 G11	
3671 H12	I629 H11	
3673 F12	I630 C8	
3675 E8	I631 E5	
3676 F8	I632 E6	
3677 F8	I633 H1	
3678 F8	I634 B6	
3679 F12	I635 C7	
3680 G12	I636 H12	
3681 G12	I637 F3	
3682 H12	I638 E10	
3683 G12	I639 D8	
3684 G12	I640 E11	
3685 H12	I641 E8	
3686 C7	I642 E10	

H_16041_005.eps
171007

PDP FHP Supply: LLC Supply

U13 E9	1083 F11	2012 D9	2024 E12	2034 E1	2044 D11	2070 E7	3001 E6	3011 E5
U14 E6	1084 G10	2013 C9	2025 E13	2035 F1	2045 F11	2071 C7	3002 C6	3012 F3
0204 H9	2000 G9	2014 F6	2026 F3	2036 D2	2046 C8	2090 B2	3003 C1	3013 F4
1000 G6	2005 C1	2015 F5	2027 E2	2037 E2	2047 E1	2290 H10	3004 C1	3014 C7
1001 G7	2006 C2	2016 E6	2028 C11	2038 C13	2048 F6	2291 G11	3005 C2	3015 C7
1002 H14	2007 F1	2017 C9	2029 G11	2039 D7	2049 C1	2292 H11	3006 D2	3016 C7
1006 G8	2008 F3	2018 C1	2030 F12	2040 D7	2052 B3	2293 H11	3007 E2	3017 D7
1008 G9	2009 E5	2020 C11	2031 F15	2041 D8	2053 B5	2294 H11	3008 E2	3018 D7
1009 G8	2010 F5	2022 E11	2032 D2	2042 D9	2060 F6	2295 G11	3009 F1	3019 E7
1082 F11	2011 E9	2023 E14	2033 D1	2043 D13	2062 A4	2296 H11	3010 E4	3020 F5

3021 F5	3032 F14	3044 D1	3057 D12	3071 F2	3089 A4	3100 F14	6003 A3	6018 C8
3022 C12	3033 D8	3045 E2	3059 D8	3072 B13	3090 A2	3292 H10	6004 D6	6019 E7
3023 E12	3034 F13	3046 E1	3060 C8	3073 D7	3091 B2	5001 C6	6005 D5	6021 F11
3024 E13	3037 C13	3047 E2	3061 D8	3075 B8	3092 A3	5002 C9	6006 D7	6023 E13
3025 F13	3038 C13	3048 D1	3064 F3	3076 C8	3093 B2	5004 E9	6007 C7	6027 C7
3027 F2	3039 C14	3049 D3	3065 E4	3077 E8	3094 A3	5290 G10	6008 D7	6028 E7
3028 F13	3040 E13	3050 F7	3066 F2	3078 E8	3095 A5	5291 H12	6009 F4	6029 B11
3029 E13	3041 F13	3052 E12	3067 F5	3080 C12	3096 A5	5292 H12	6010 F4	6031 D2
3030 F12	3042 D1	3054 D6	3069 E1	3081 A4	3097 B5	5293 G12	6011 F4	6032 D2
3031 F13	3043 D1	3056 E4	3070 E5	3082 B5	3098 F15	6002 A4	6012 B11	6033 E1

6034 D2	7001 B3	7012 D7	7093 A4	F009 D6	F296 G13	I008 C2	I018 E2	I028 G3
6035 D2	7002 B9	7013 A3	9007 A3	F014 E12	F297 H12	I009 C2	I019 E1	I029 G3
6042 C13	7003 A9	7017 F3	F001 A6	F016 B13	F298 H12	I010 D2	I020 E3	I030 E5
6044 C11	7005 B8	7018 F3	F002 C7	F017 C11	I001 A2	I011 D1	I021 E1	I031 E4
6045 F11	7006 E8	7020 C8	F003 C5	F040 B14	I002 A3	I012 D4	I022 F2	I032 E5
6075 B8	7007 C7	7021 D8	F004 C5	F290 H12	I003 A5	I013 D2	I023 F3	I033 F4
6077 D8	7008 E7	7042 C13	F005 C9	F292 H12	I004 A5	I014 E1	I024 F3	I034 F5
6095 A5	7009 E4	7090 A2	F006 D8	F293 G12	I005 B2	I015 D2	I025 F2	I035 F5
6291 H11	7010 E12	7091 A3	F007 F3	F294 H12	I006 B4	I016 E2	I026 F1	I036 F5
6292 H11	7011 F13	7092 A3	F008 D5	F295 H12	I007 C2	I017 E2	I027 C2	I037 C8

I038 C8	I049 D8	I060 A10	I072 D11	I083 F8	I095 H6	I289 A5	I299 B11
I039 D6	I050 D8	I061 A10	I073 F10	I084 F8	I096 H7	I290 G11	
I041 B8	I051 E7	I062 B10	I074 F11	I085 E12	I098 H8	I291 H11	
I042 B7	I052 D7	I063 B10	I075 C13	I088 E13	I282 D1	I292 H10	
I043 B7	I053 E7	I064 B8	I077 F11	I089 E12	I283 F14	I293 H11	
I044 B8	I054 E7	I065 C9	I078 C13	I090 E13	I284 E15	I294 D13	
I045 C6	I055 E8	I066 C8	I079 C13	I091 E14	I285 A4	I295 D6	
I046 C7	I056 A2	I067 C8	I080 G10	I092 F13	I286 A4	I296 F6	
I047 D7	I057 D7	I070 B11	I081 F7	I093 F12	I287 A4	I297 E7	
I048 D7	I059 E8	I071 F10	I082 F7	I094 F12	I288 B5	I298 C7	

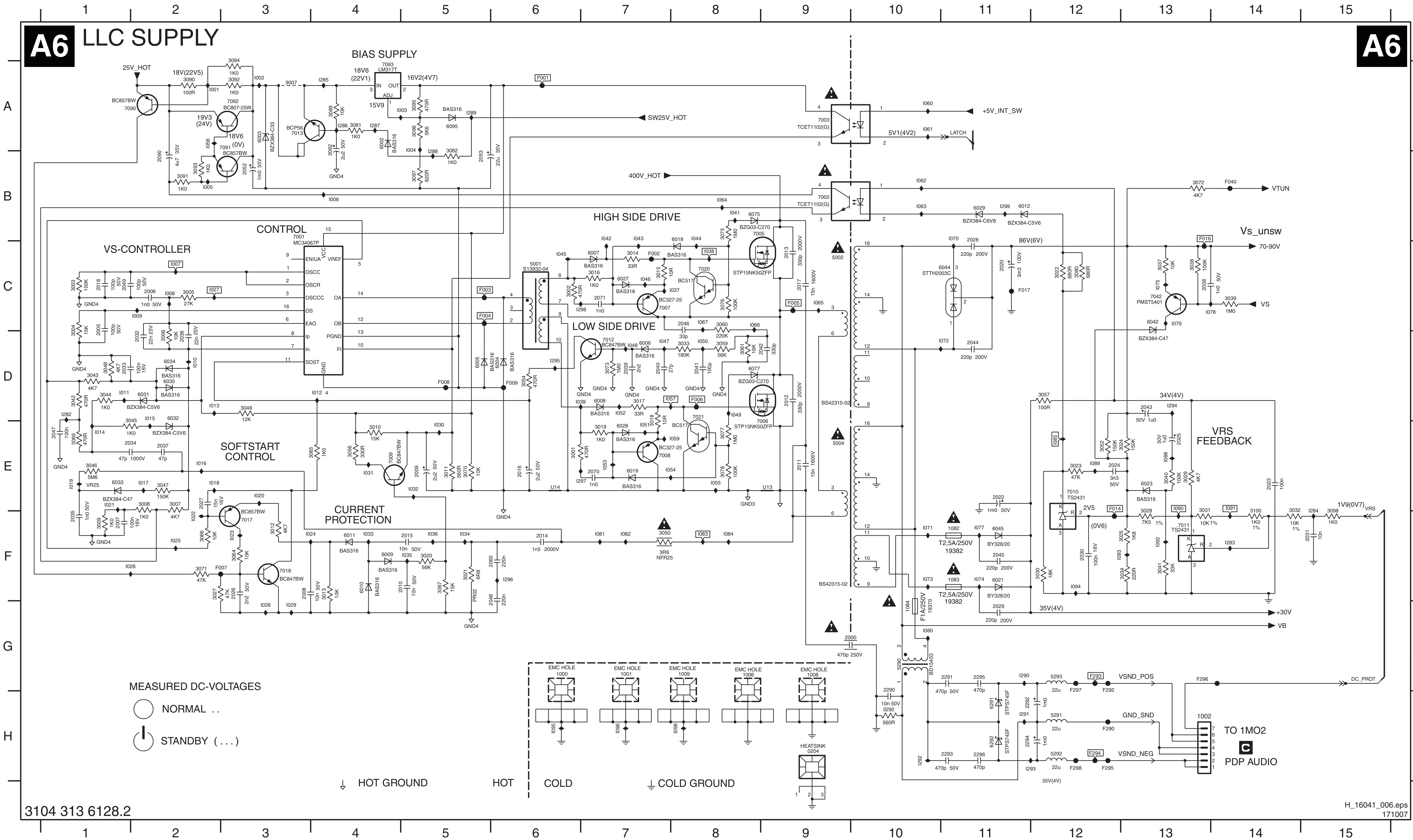

PDP FHP Supply: AUX Supply

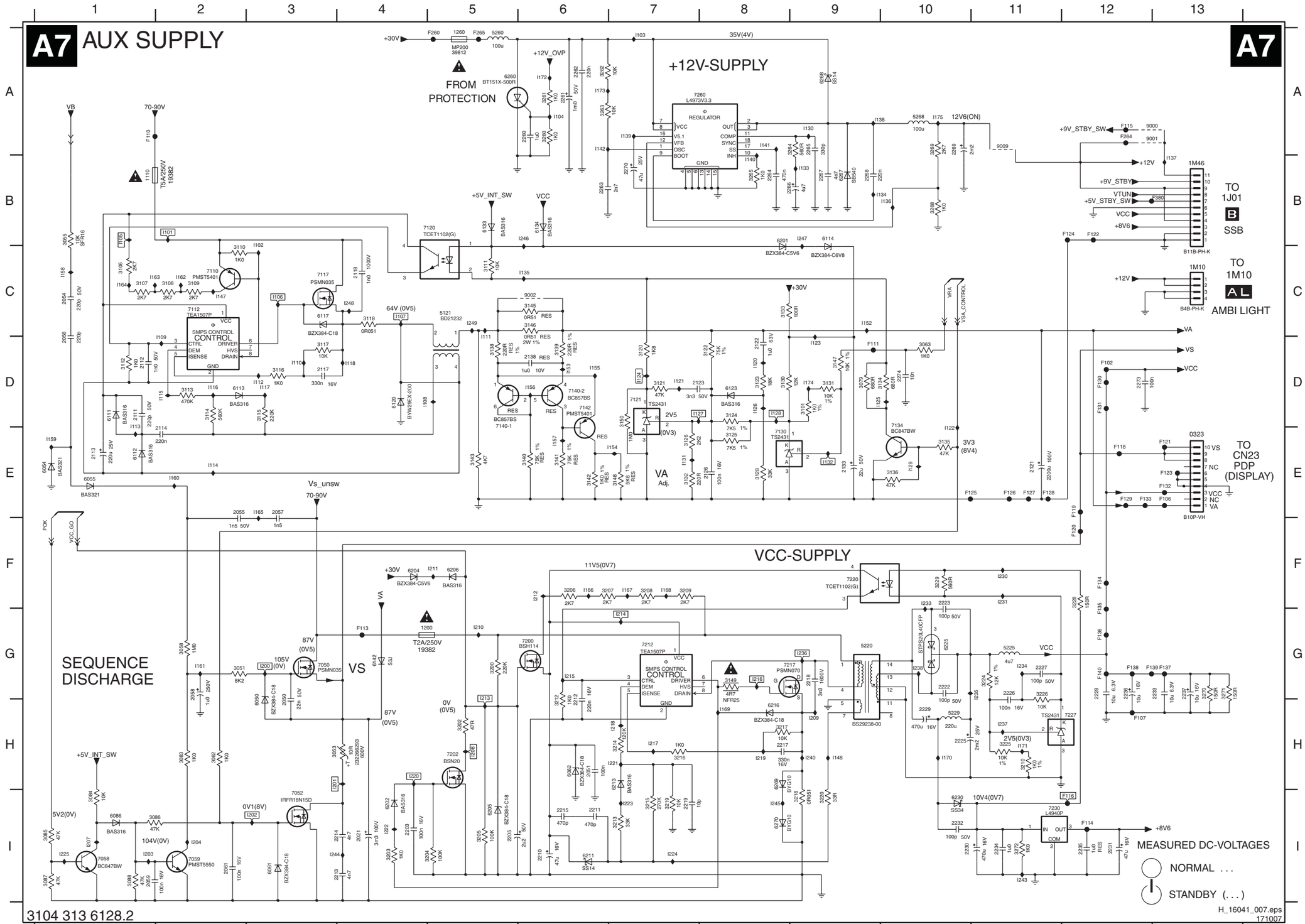

1110 B1	3210 H11	I105 B1
1200 G4	3212 H6	I106 C3
1260 A5	3213 I7	I107 C4
1M10 C13	3214 H7	I108 D4
1M46 B13	3215 I7	I109 D2
2021 I4	3216 H7	I110 D3
2050 H3	3217 H8	I111 D5
2051 H6	3218 I9	I112 D3
2054 C1	3219 I7	I113 D1
2055 E2	3220 I9	I114 E2
2056 D1	3224 G11	I115 D2
2057 E3	3225 H11	I116 D2
2058 G2	3226 G11	I117 D3
2059 I1	3228 F12	I118 D4
2061 I2	3229 F10	I120 D8
2111 D1	3260 A6	I121 D7
2112 D1	3261 A6	I122 E10
2113 E1	3262 A6	I123 D9
2114 E2	3263 A6	I124 D7
2117 D3	3264 A9	I125 D9
2118 C4	3265 B8	I126 D8
2121 E11	3268 B10	I127 D7
2122 D8	3269 A10	I128 D8
2123 D7	3270 G13	I129 E10
2126 E8	3271 G13	I130 A9
2133 E9	3272 I11	I131 E7
2138 D6	5121 C5	I132 E9
2203 I4	5220 G9	I133 B9
2205 I5	5225 G11	I134 B10
2210 I6	5229 H10	I135 C6
2211 I6	5260 A5	I136 B10
2212 H6	5268 A10	I137 B13
2213 I4	6050 H3	I138 A9
2214 I4	6054 E1	I139 A7
2215 I6	6055 E1	I140 B8
2217 H8	6061 I3	I141 A8
2218 G9	6062 H6	I142 A6
2219 I7	6086 I1	I147 C2
2222 G10	6111 D1	I148 H9
2223 F10	6112 E1	I152 C9
2225 H10	6113 D2	I153 D6
2226 G11	6114 B9	I154 E7
2227 G11	6117 C3	I155 D6
2228 G12	6120 D4	I156 D6
2229 H10	6123 D8	I157 E6
2230 I10	6133 B5	I158 C1
2231 I12	6134 B6	I159 E1
2232 I10	6142 G4	I160 E2
2233 G13	6201 B8	I161 G2
2234 I11	6202 I4	I162 C2
2235 I12	6204 F4	I163 C1
2236 G12	6205 I5	I164 C1
2237 G13	6206 F5	I165 E3
2260 A6	6211 I6	I166 F6
2261 A6	6212 H7	I167 F7
2262 A6	6216 H8	I168 F7
2263 B6	6225 G10	I169 H8
2264 B8	6230 I10	I170 H10
2265 A9	6260 A5	I171 H11
2266 B9	6267 B9	I172 A6
2267 B9	6268 A9	I173 A6
2268 B9	6269 H8	I174 D9
2269 A10	6270 I8	I175 A10
2270 B7	7050 G3	I200 G3
2273 D12	7052 I3	I201 H3
2274 D10	7058 I1	I202 I3
3051 G2	7059 I2	I203 I1
3053 H3	7110 C2	I204 I2
3055 B1	7112 C2	I207 I1
3058 G2	7117 C3	I208 H5
3062 H2	7120 B5	I209 H9
3063 D10	7121 D7	I210 G5
3079 D9	7130 E8	I211 F5
3083 H2	7134 E10	I212 F6
3084 I1	7140-1 D5	I213 G5
3085 I1	7140-2 D6	I214 G7
3086 I1	7142 D6	I215 G6
3087 I1	7200 G6	I216 G8
3088 I1	7202 H5	I217 H7
3101 D9	7212 G7	I218 H7
3106 C1	7217 G8	I219 H8
3107 C1	7220 F9	I220 H4
3108 C2	7227 H12	I221 H7
3109 C2	7230 I11	I222 I4
3110 C2	7260 A8	I223 I7
3111 C5	9000 A12	I224 I7
3112 D1	9001 A12	I225 I1
3113 D2	9002 C6	I230 F11
3114 D2	9009 A11	I231 F11
3115 D3	F102 D12	I233 F10
3116 D3	F106 E13	I234 G11
3117 D3	F107 H12	I235 G11
3118 C4	F110 A1	I236 G9
3120 D7	F111 D9	I237 H11
3121 D7	F113 G4	I238 G10
3122 D8	F114 I12	I240 H9
3123 D8	F115 A12	I243 I11
3124 D8	F116 I12	I244 I3
3125 E8	F118 E12	I245 I8
3126 E7	F119 E12	I246 B6
3128 E8	F120 F12	I247 B9
3130 D8	F121 E13	I248 C4
3131 D9	F122 B12	I249 C5
3132 E7	F123 E13	
3133 C8	F124 B12	
3134 D10	F125 E10	
3135 E10	F126 E11	
3136 E10	F127 E11	
3138 D5	F128 E11	
3139 D6	F129 E12	
3140 E6	F130 D12	
3141 E6	F131 D12	
3142 E6	F132 E13	
3143 E5	F133 E12	
3145 C6	F134 F12	
3146 C6	F135 G12	
3147 D9	F136 G12	
3148 E7	F137 G13	
3149 G8	F138 G12	
3150 D7	F139 G12	
3200 G5	F140 G12	
3202 H5	F260 A5	
3203 I4	F264 A12	
3204 I5	F265 A5	
3205 I5	F380 B13	
3206 F6	I101 B2	
3207 F6	I102 B3	
3208 F7	I103 A7	

Layout PDP FHP Supply (Overview Top Side)

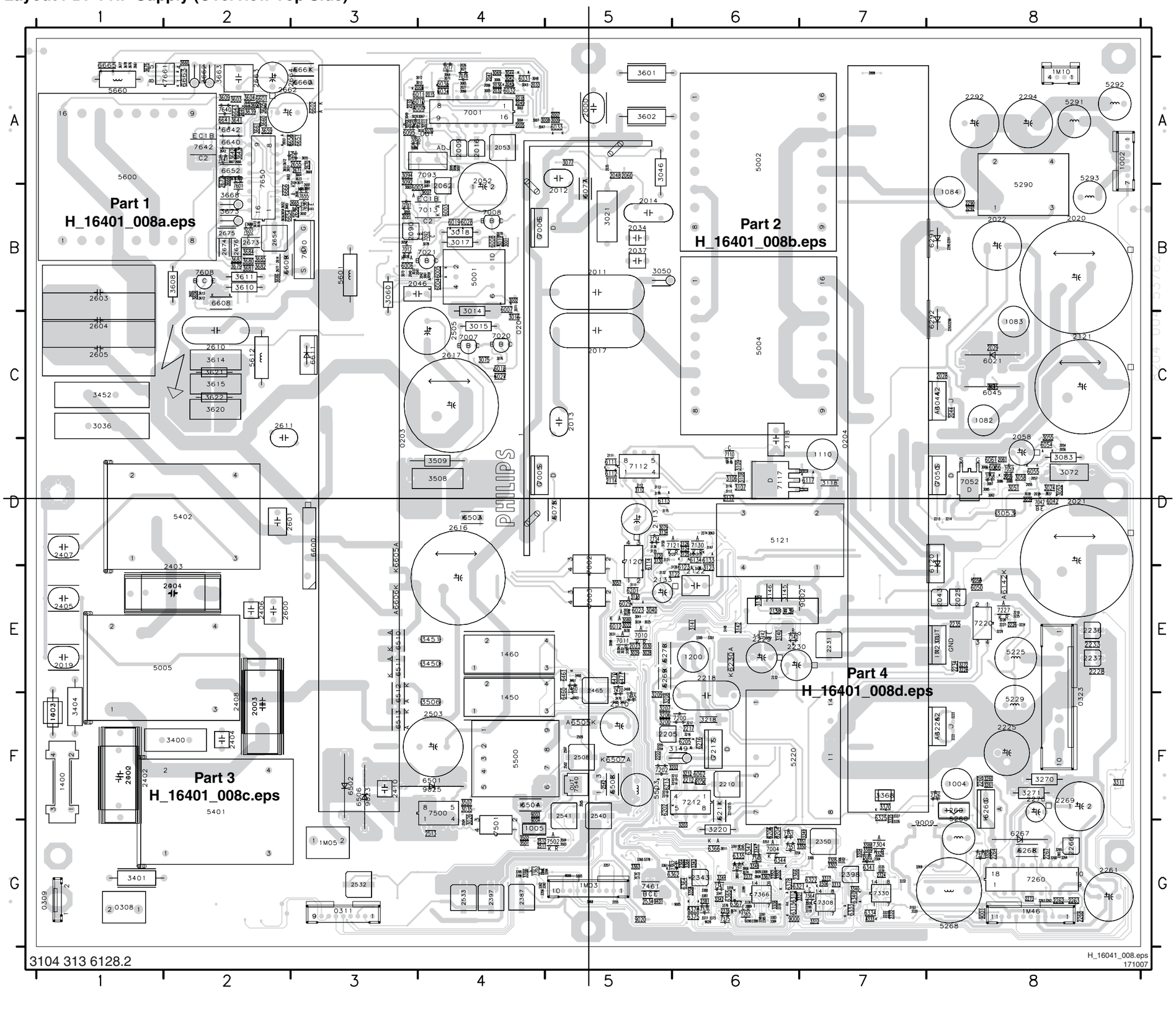

0201 C5
0203 D6
0204 D2
0308 G8
0309 G8
0311 G6
0323 F1
1002 A1
1003 F8
1004 F1
1082 C1
1083 B1
1084 A1
1110 D2
1200 E3
1260 G1
1400 F8
1402 F8
1450 F5
1460 E5
1M03 G4
1M05 G6
1M10 A1
1M46 G1
2000 A4
2001 F7
2002 F8
2003 F7
2004 E8
2011 B4
2012 A4
2013 C4
2014 B4
2017 C4
2019 E8
2020 B1
2021 D1
2022 B1
2034 B4
2037 B4
2046 B6
2052 A5
2058 D1
2113 D4
2118 D3
2121 C1
2122 E3
2133 E4
2218 E3
2225 F1
2229 E3
2230 E3
2261 G1
2269 F1
2270 F1
2292 A1
2294 A1
2400 F8
2401 E7
2402 F8
2403 E7
2404 F7
2405 E8
2406 E7
2407 D8
2408 E7
2410 F6
2503 F5
2505 C5
2510 F4
2600 E7
2601 D7
2603 B8
2604 C8
2605 C8
2610 C7
2611 D7
2616 D5
2617 C5
2662 A7
2663 A7
2664 A7
3014 B5
3015 C5
3017 B5
3018 B5
3021 B4
3036 C8
3046 A4
3050 B4
3053 D1
3060 B6
3072 D1
3083 D1
3143 E3
3149 F3
3220 G3
3270 F1
3271 F1
3368 F2
3400 F7
3401 G8
3404 F8
3450 E5
3451 E5
3452 C8
3506 F5
3508 D5
3509 D5
3601 A4
3602 A4
3608 B7
3610 B7
3611 B7
3614 C7
3615 C7
3620 C7
3621 C7
3622 C7
3662 A7
3663 A7
3668 B7
3673 B7
5001 B5
5002 A3
5004 C3
5005 E7
5121 D3
5220 F3
5225 E1
5229 F1
5260 G1
5268 G1
5290 B1
5291 A1
5292 A1
5293 B1
5401 F7
5402 D7
5500 F5
5503 F4
5600 B8
5601 B6
5612 C7
5660 A8
6021 C1
6044 C1
6045 C1
6120 D2
6225 F1
6260 F1
6267 G1
6291 B1
6292 C1
6501 F5
6502 F6
6506 F6
6600 D6
6611 C6
7001 A5
7002 D4
7003 E4
7004 D5
7005 D4
7006 B4
7007 C5
7008 B5
7020 C5
7021 B5
7050 D1
7093 A5
7112 D4
7120 D4
7212 F3
7217 F3
7220 E1
7230 E1
7260 G1
7500 G5
7501 G5
7608 B7
7610 B7
7650 A7
9002 E2
9009 G2
9023 F6
9025 F5

Layout PDP FHP Supply (Part 1 Top Side)

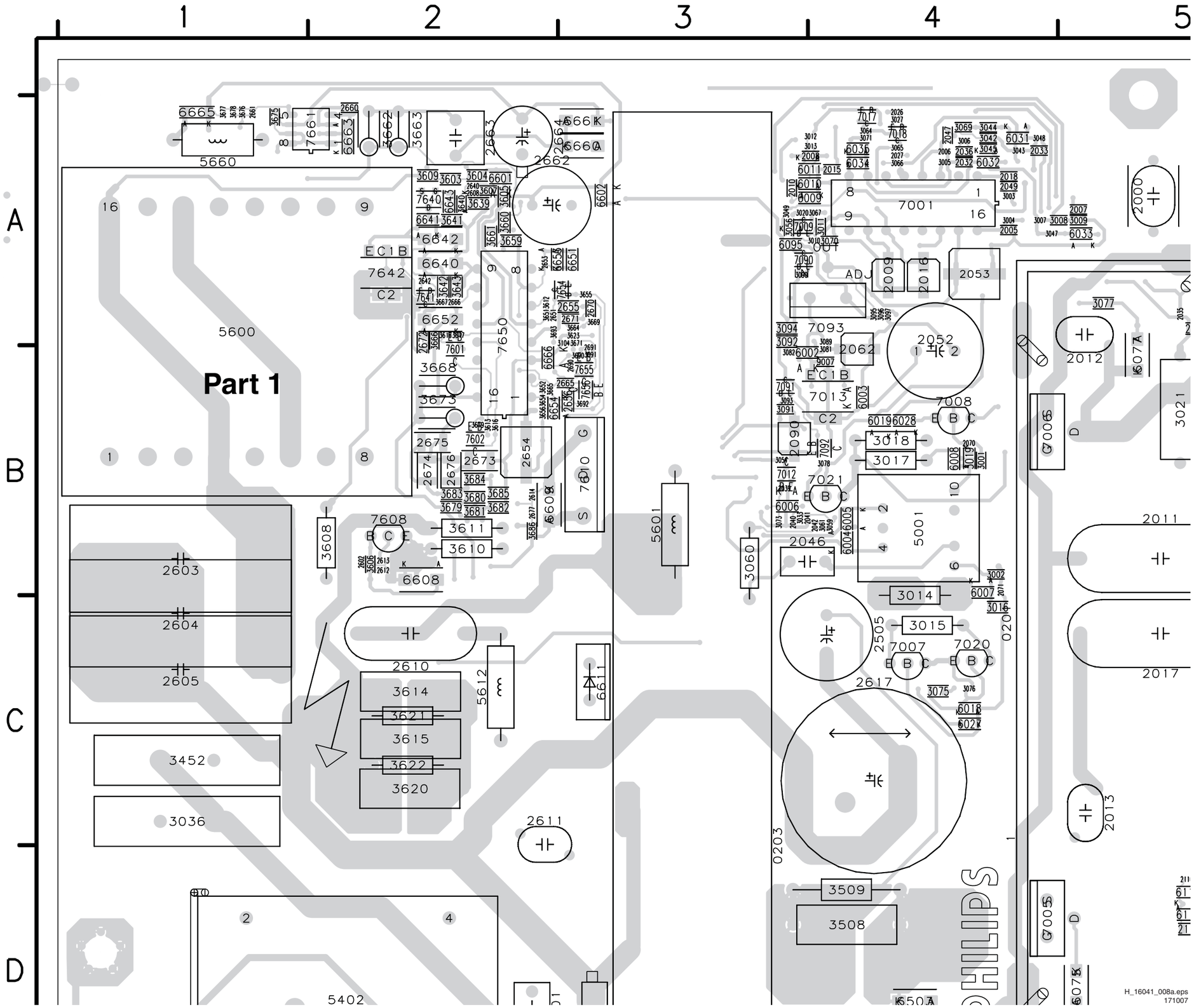

Layout PDP FHP Supply (Part 2 Top Side)

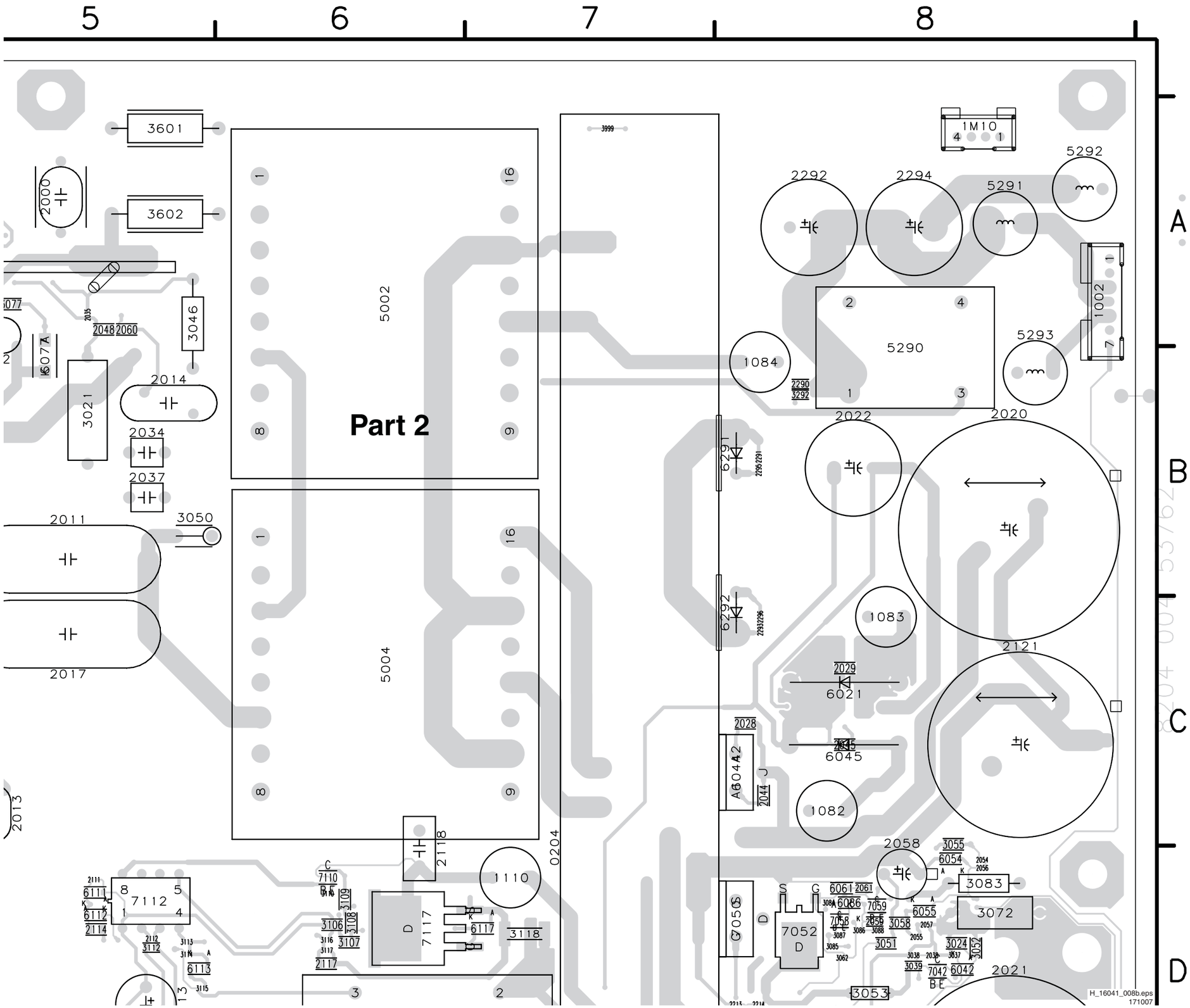

Layout PDP FHP Supply (Part 3 Top Side)

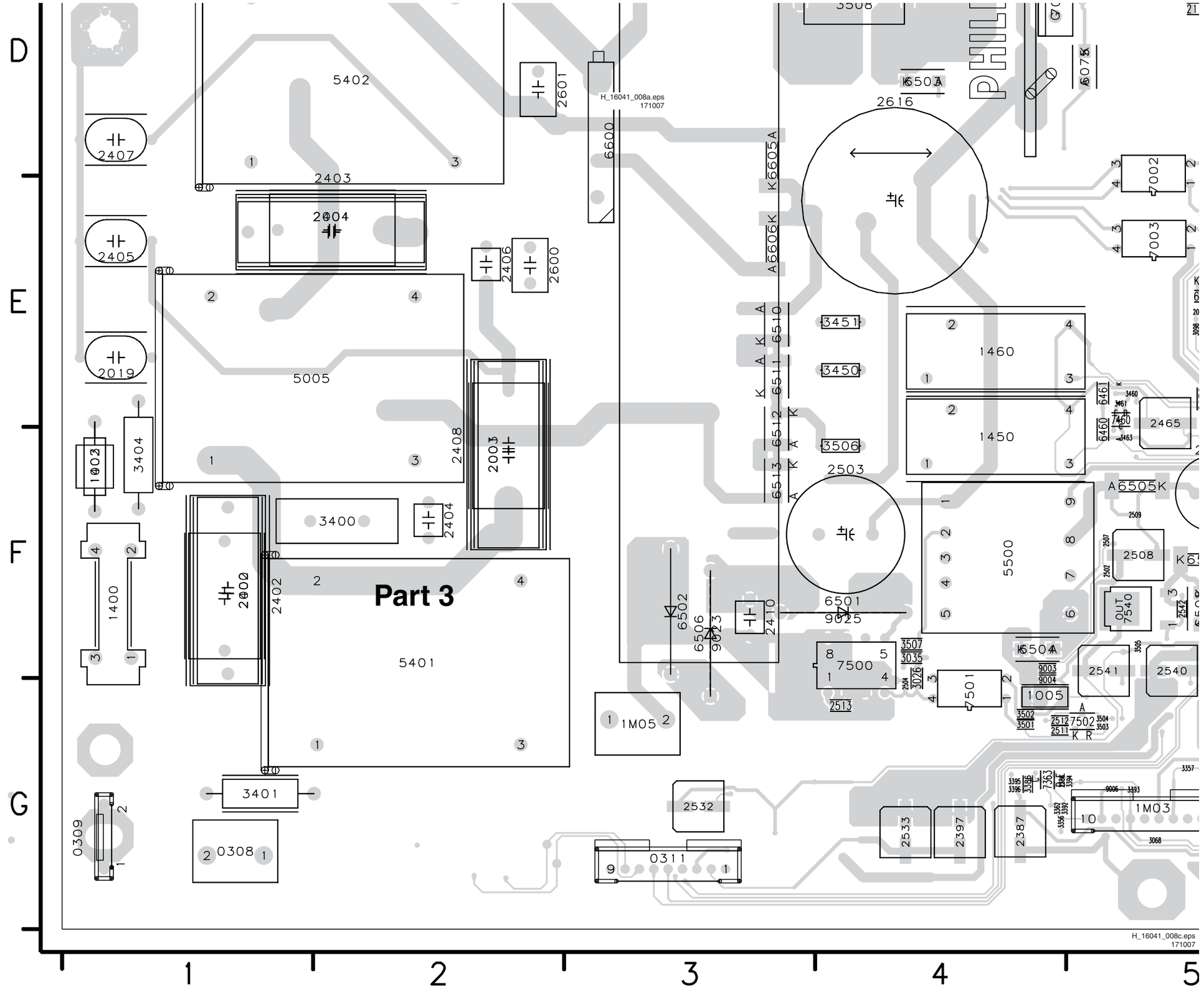

Layout PDP FHP Supply (Part 4 Top Side)

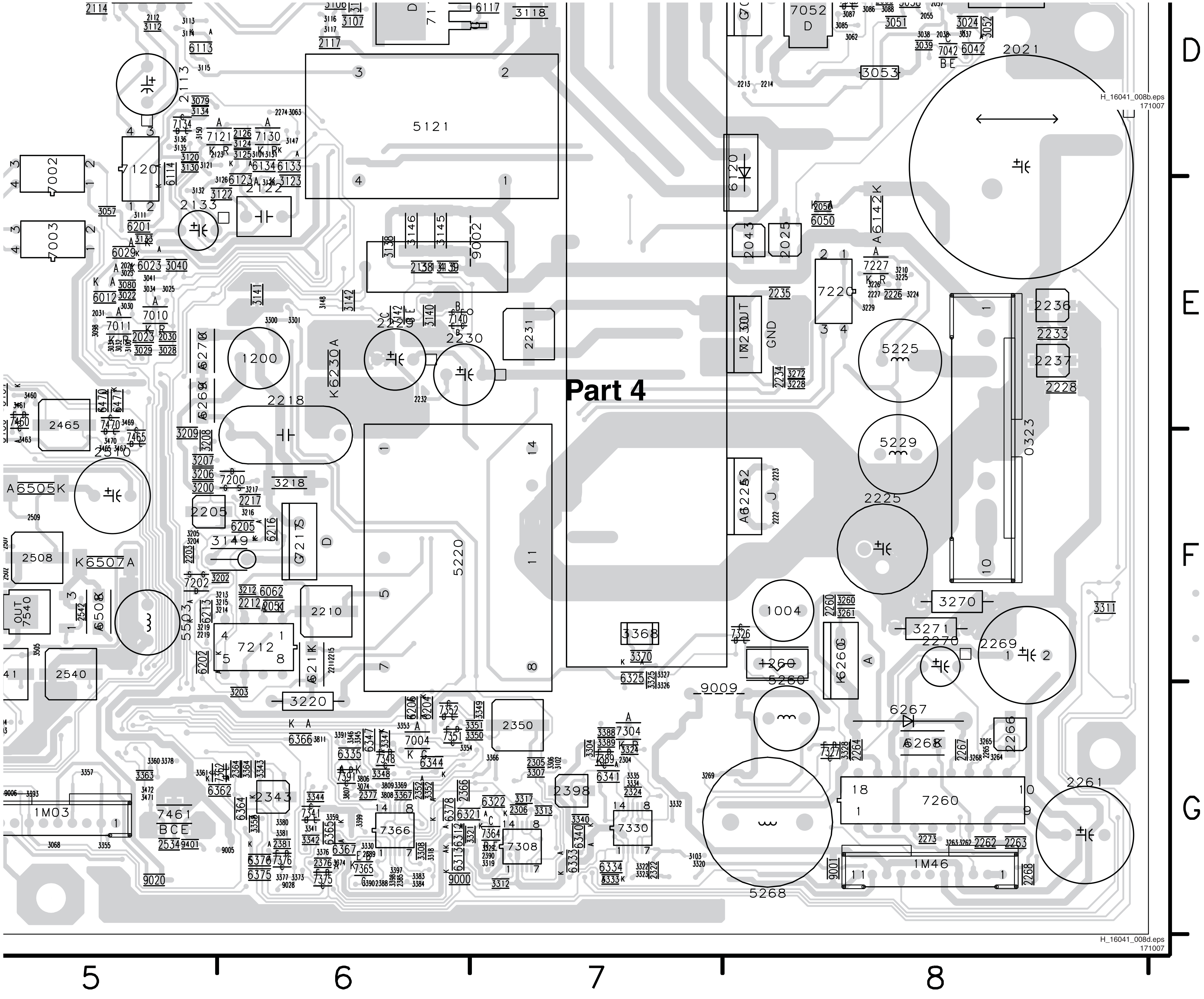

Layout PDP FHP Supply (Bottom View)

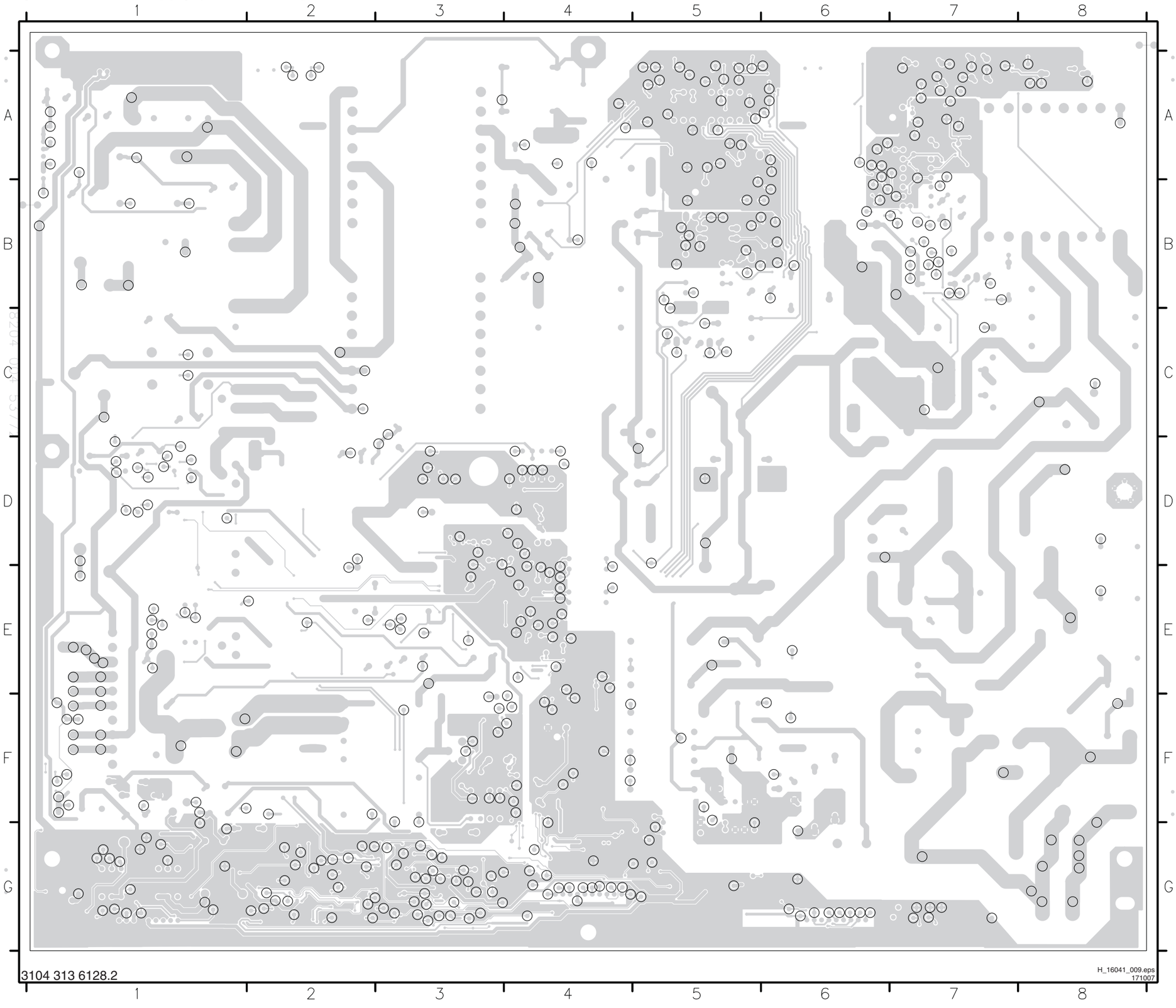

SSB: Tuner and VIF

B1 TUNER & IF (EUROPE ONLY)

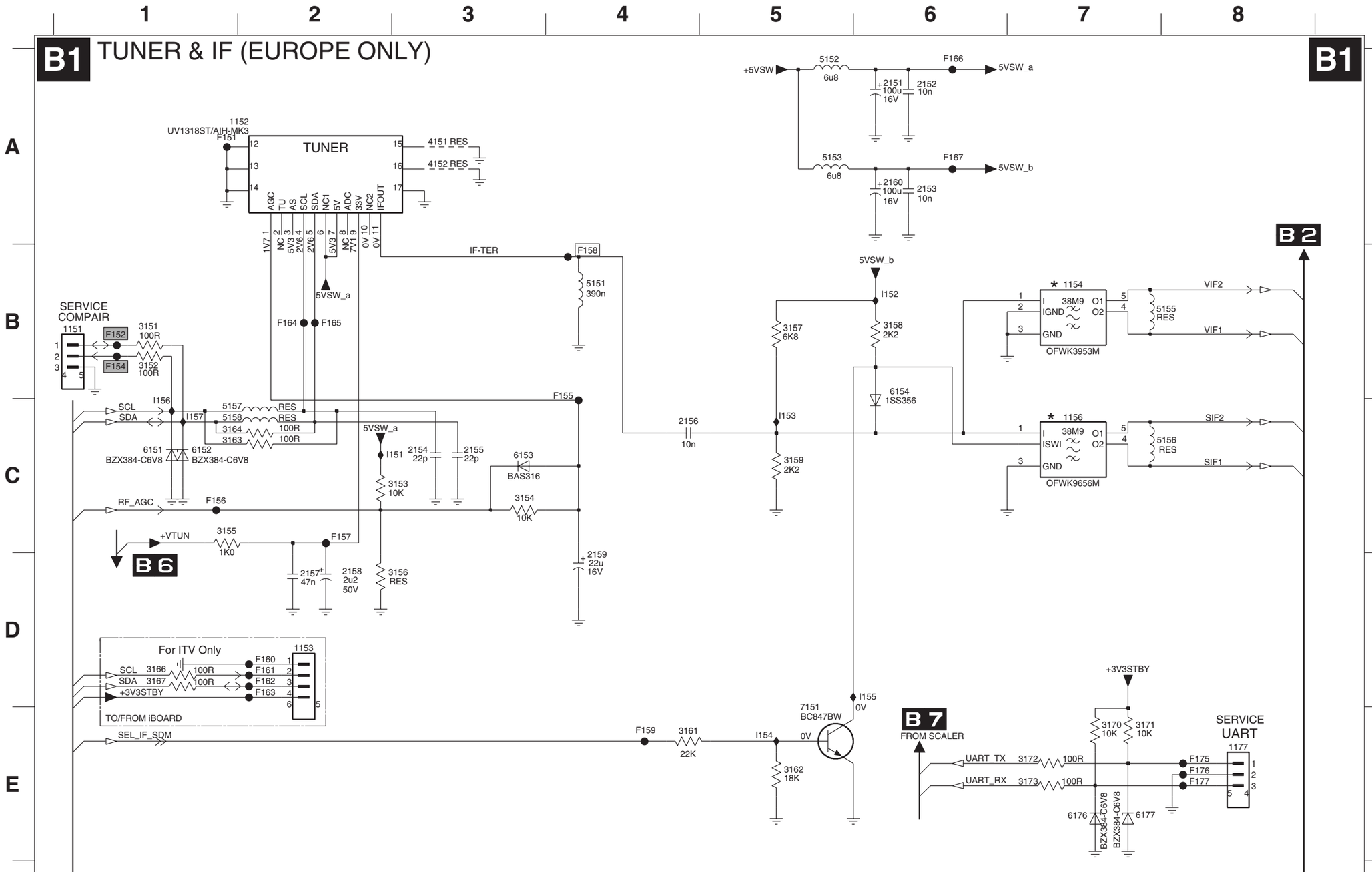

3139 123 6117.2

G_16210_001.eps
160106

1151 B1 F177 E8
1152 A2 I151 C3
1153 D2 I152 B6
1154 B7 I153 C5
1156 C7 I154 E5
1177 E8 I155 D6
2151 A6 I156 C1
2152 A6 I157 C1
2153 A6
2154 C3
2155 C3
2156 C4
2157 D2
2158 D2
2159 C4
2160 A6
3151 B1
3152 B1
3153 C3
3154 C3
3155 C1
3156 D3
3157 B5
3158 B6
3159 C5
3161 E4
3162 E5
3163 C1
3164 C1
3166 D1
3167 D1
3170 E7
3171 E7
3172 E7
3173 E7
4151 A3
4152 A3
5151 B4
5152 A5
5153 A5
5155 B7
5156 C8
5157 C1
5158 C1
6151 C1
6152 C1
6153 C3
6154 B6
6176 E7
6177 E7
7151 E5
F151 A1
F152 B1
F154 B1
F155 C4
F156 C1
F157 C2
F158 B4
F159 E4
F160 D2
F161 D2
F162 D2
F163 D2
F164 B2
F165 B2
F166 A6
F167 A6
F175 E8
F176 E8

SSB: Hercules

B2 HERCULES

AUDIO PROCESSING

HERCULES
TDA15021H/N1A11

Φ VIDEO SIGNAL PROCESSOR

Φ (2Kx8) EEPROM

SECAM CIRCUIT (RESERVED)

ES10.3B RESET (RESERVED)

B3 / B13

1201 B7 3211 B6 4221 A12 F254 G9
1202 G10 3212 B6 5201 B5 F255 C7
2201 A3 3213 B6 5202 B5 F256 B6
2202 B3 3214 B7 5203 B7 F257 E10
2203 D2 3215 B6 5204 D5 F258 C11
2204 C5 3216 A6 5205 D5 F262 F10
2205 G4 3217 B7 5206 D4 F263 F10
2206 G4 3218 B7 5207 D4 F264 F10
2207 F5 3219 B7 5208 D5 I201 A5
2208 G4 3220 B7 5209 D5 I202 B5
2209 G4 3221 A11 5210 D5 I203 B6
2210 B5 3222 B8 5211 E5 I204 B6
2211 B6 3223 B8 5212 E5 I205 B6
2212 B12 3224 B8 5213 E5 I206 A7
2213 B7 3225 B8 5214 G9 I207 C7
2214 B6 3226 B9 5215 F10 I208 B7
2216 B6 3227 C8 5216 F10 I209 C8
2218 A7 3228 D2 5217 H7 I210 C8
2219 A7 3229 C9 5218 F2 I211 B8
2220 B7 3230 B9 6201 E4 I212 B9
2221 A7 3231 B9 6204 C11 I213 C10
2222 E5 3232 B9 6205 C11 I214 C10
2223 B8 3233 B9 6206 C12 I215 C10
2224 C8 3234 B9 7201-1 B1 I217 C11
2225 B10 3235 B9 7201-2 C2 I218 D3
2226 C10 3236 B9 7202-1 C2 I219 C5
2227 B11 3237 C9 7202-2 C3 I220 D5
2228 C5 3238 B10 7203-1 C3 I221 D5
2229 C5 3239 C10 7203-2 C3 I222 D5
2230 D4 3240 B10 7204-1 A4 I223 D5
2231 D5 3241 B10 7204-2 A3 I224 E5
2232 D5 3242 C10 7205-1 B4 I225 C10
2233 D5 3243 C10 7205-2 B4 I226 F8
2234 D4 3244 D2 7206 B6 I227 F6
2235 D4 3245 C10 7207 B12 I228 F7
2236 D5 3246 C11 7208 D2 I229 F7
2237 D5 3247 B11 7209 D2 I230 F7
2238 E5 3248 C11 7210 D3 I231 F7
2239 E5 3249 B11 7211 F4 I232 F8
2240 E5 3250 D2 7214 G3 I233 F8
2241 E5 3251 D3 7215 G4 I234 F8
2242 E5 3252 D3 7216-1 G3 I235 F8
2243 E5 3253 D3 7216-2 G3 I236 F8
2244 E5 3254 F3 7217 C6 I237 F8
2245 E5 3255 E2 7218 F11 I238 F9
2246 F5 3256 E2 7219 F2 I239 F9
2247 F6 3257 E3 7220 A11 I240 F10
2248 G6 3258 E2 7221 A12 I241 B10
2249 G6 3259 E2 F201 B2 I242 F4
2250 F7 3260 E3 F202 B2 I243 C4
2251 F7 3261 A12 F203 B3 I244 B7
2252 F7 3262 F3 F204 B3 I246 D2
2253 F7 3263 F3 F205 B6 I247 D4
2254 F7 3264 F4 F206 B6 I248 D4
2255 F7 3265 F4 F207 C7 I254 F6
2256 F8 3266 F4 F208 C7 I255 F6
2257 F8 3267 F4 F209 B7 I256 E7
2258 G5 3268 F5 F210 F2 I257 E7
2259 G8 3270 F7 F211 C9 I258 E7
2260 F8 3271 F7 F212 C8 I259 F8
2262 G8 3272 F8 F213 C10 I262 F8
2263 F8 3273 F8 F214 B10 I264 F9
2264 G8 3274 F8 F215 B10 I265 F10
2265 G8 3275 F9 F216 C10 I266 F10
2266 G8 3276 F9 F217 B11 I267 F11
2267 F8 3277 F10 F218 B11 I268 G11
2268 G8 3278 F11 F219 C12 I269 C11
2269 F9 3279 G11 F220 D3 I270 B11
2270 F9 3280 E4 F221 D3 I271 B10
2271 F9 3281 F8 F222 D5 I272 B10
2272 F9 3282 F3 F223 D5 I273 C9
2273 F10 3283 B8 F224 D5 I274 A9
2274 F10 3284 B8 F225 D5 I275 A9
2275 G9 3285 G6 F226 D5 I277 C8
2276 G10 3286 H6 F227 D4 I278 C8
2277 F10 3287 B7 F228 E5 I283 B6
2278 F11 3288 B7 F229 E5 I284 B6
2279 F11 3289 D2 F230 G4 I285 B6
2280 A3 3290 B8 F231 G4 I288 B6
2281 B3 3291 F2 F232 F5 I289 A3
2282 F10 3292 F2 F233 F5 I290 A3
2283 F10 3293 G2 F234 F5 I291 A4
2284 F10 3294 G2 F235 F5 I292 B3
2285 F6 3295 F8 F236 F6 I293 B3
2286 F7 3296 B5 F237 F6 I294 B3
2287 H7 3297 A11 F238 F6 I297 B8
2288 H6 3298 A12 F239 F6 I298 C7
2290 F3 3299 B10 F240 F6
2291 F2 4204 C9 F241 G7
2292 E11 4205 C9 F242 G7
2293 C10 4206 F3 F243 G7
3201 A3 4207 E2 F244 F8
3202 A4 4208 E2 F245 F9
3203 A4 4209 E3 F246 F10
3204 B3 4211 A4 F247 D11
3205 B4 4212 B4 F248 F8
3206 B4 4216 B9 F249 E11
3207 B6 4217 B9 F250 A7
3208 B6 4218 B9 F251 G9
3209 B6 4219 B9 F252 G9
3210 B6 4220 A11 F253 G9

G_16210_002.eps
160106

SSB: Sync Interface

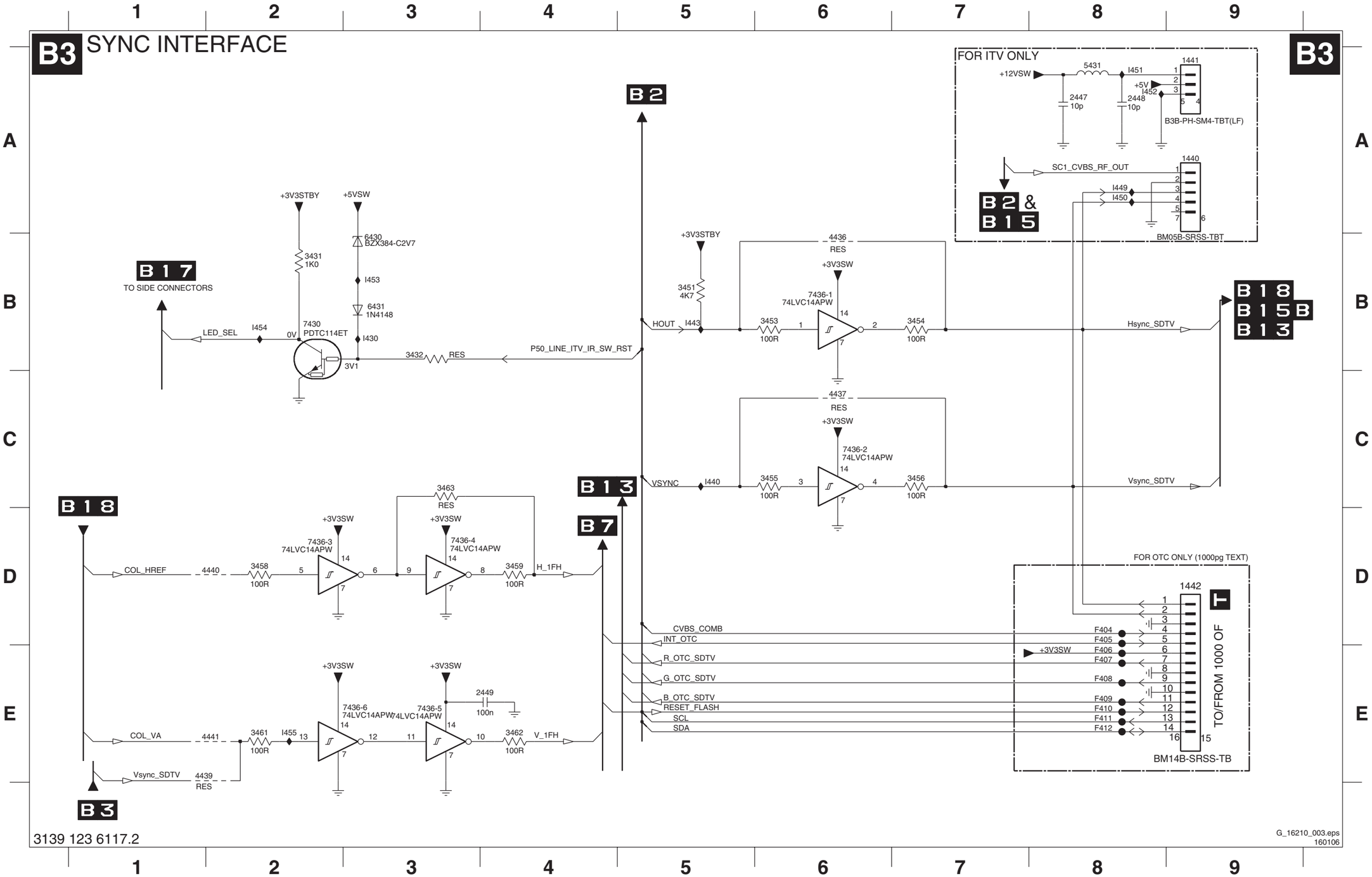

1440 A9
1441 A9
1442 D9
2447 A8
2448 A8
2449 E4
3431 B2
3432 B3
3451 B5
3453 B6
3454 B7
3455 C6
3456 C7
3458 D2
3459 D4
3461 E2
3462 E4
3463 C3
4436 B6
4437 C6
4439 E1
4440 D2
4441 E2
5431 A8
6430 B3
6431 B3
7430 B2
7436-1 B6
7436-2 C6
7436-3 D2
7436-4 D3
7436-5 E3
7436-6 E3
F404 D8
F405 D8
F406 E8
F407 E8
F408 E8
F409 E8
F410 E8
F411 E8
F412 E8
I430 B3
I440 C5
I443 B5
I449 A8
I450 A8
I451 A8
I452 A8
I453 B3
I454 B2
I455 E2

SSB: Audio Delay Line (PDP Only)

B4 AUDIO DELAY LINE (LIPSYNC) (FOR PDP SETS ONLY)

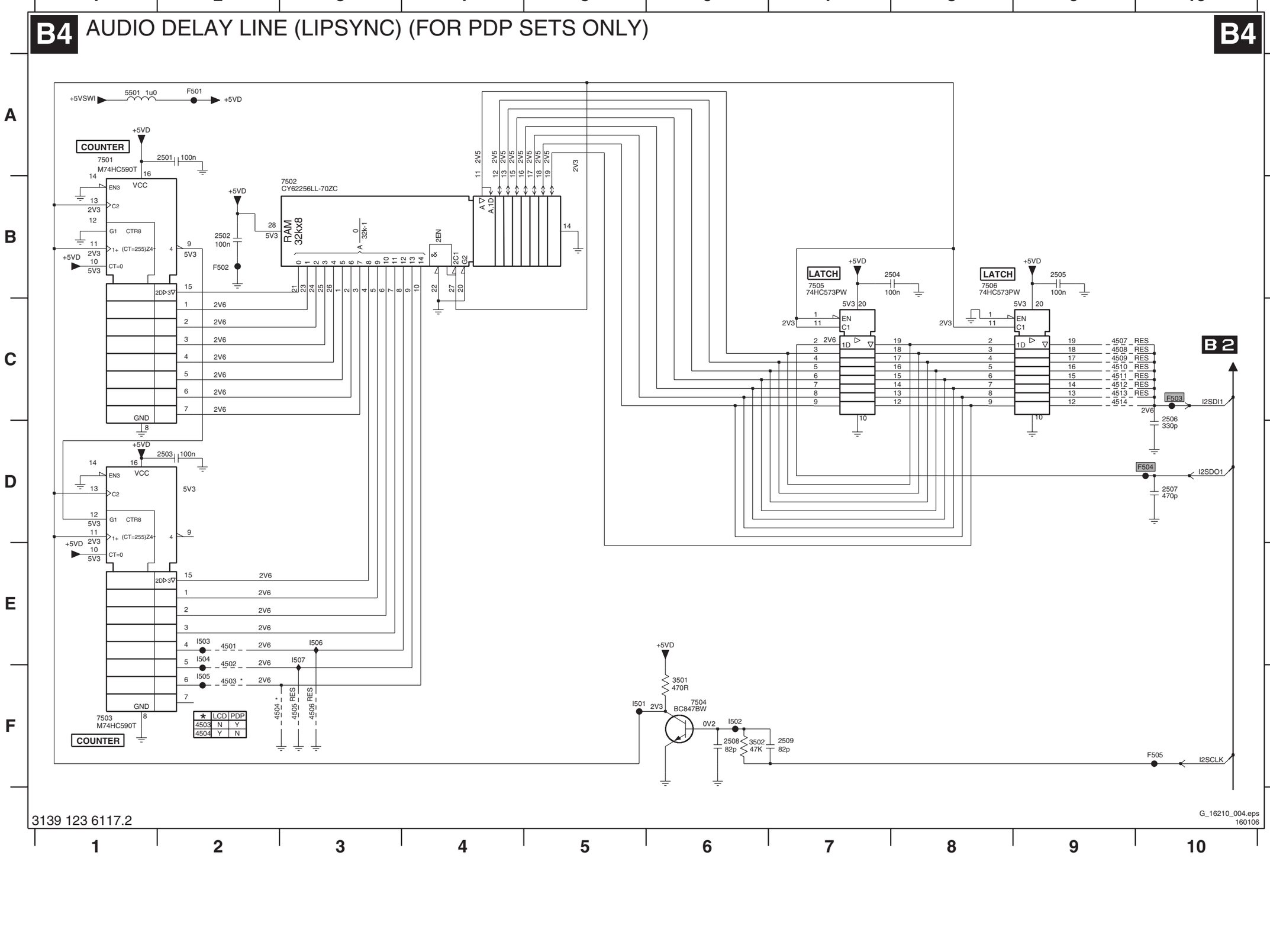

2501 A2
2502 B2
2503 D2
2504 B8
2505 B9
2506 C10
2507 D10
2508 F6
2509 F7
3501 F6
3502 F6
4501 E2
4502 F2
4503 F2
4504 F2
4505 F3
4506 F3
4507 C9
4508 C9
4509 C9
4510 C9
4511 C9
4512 C9
4513 C9
4514 C9
5501 A1
7501 A1
7502 B3
7503 F1
7504 F6
7505 B7
7506 B8
F501 A2
F502 B2
F503 C10
F504 D10
F505 F10
I501 F5
I502 F6
I503 E2
I504 E2
I505 F2
I506 E3
I507 E3

3139 123 6117.2

G_16210_004.eps
160106

SSB: Audio Processing

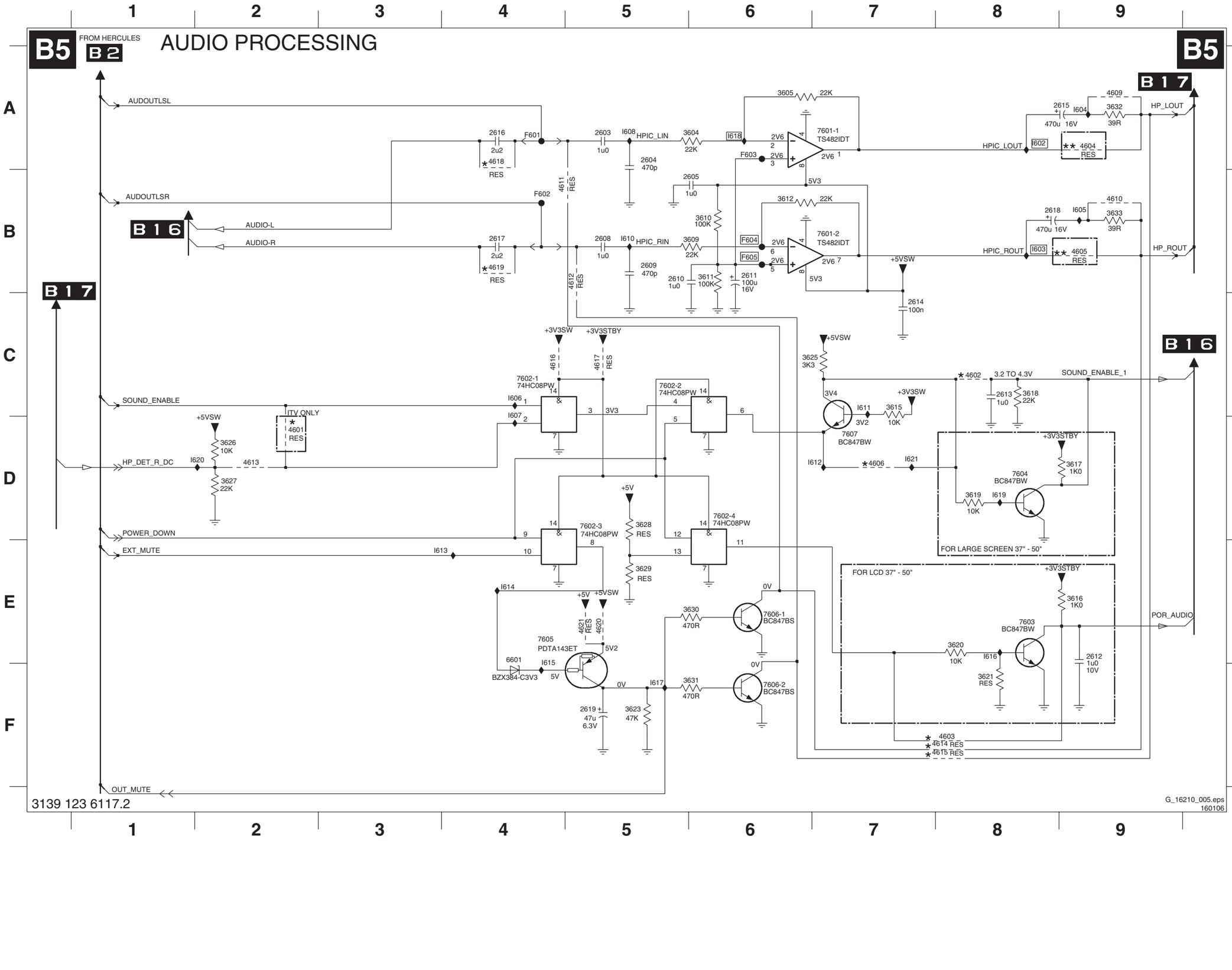

2603 A5 I602 A8
2604 A5 I603 B8
2605 B6 I604 A9
2608 B5 I605 B9
2609 B5 I606 C4
2610 B5 I607 C4
2611 B6 I608 A5
2612 E9 I610 B5
2613 C8 I611 C7
2614 C7 I612 D7
2615 A9 I613 E3
2616 A4 I614 E4
2617 B4 I615 E4
2618 B8 I616 E8
2619 F5 I617 F5
3604 A6 I618 A6
3605 A6 I619 D8
3609 B6 I620 D2
3610 B6 I621 D7
3611 B6
3612 B6
3615 C7
3616 E9
3617 D9
3618 C8
3619 D8
3620 E8
3621 F8
3623 F5
3625 C6
3626 D2
3627 D2
3628 D5
3629 E5
3630 E6
3631 F6
3632 A9
3633 B9
4601 D2
4602 C8
4603 F8
4604 A9
4605 B9
4606 D7
4609 A9
4610 B9
4611 B4
4612 B5
4613 D2
4614 F8
4615 F8
4616 C4
4617 C5
4618 A4
4619 B4
4620 E5
4621 E5
6601 E4
7601-1 A7
7601-2 B7
7602-1 C4
7602-2 C5
7602-3 D5
7602-4 D6
7603 E8
7604 D8
7605 E4
7606-1 E6
7606-2 F6
7607 D7
F601 A4
F602 B4
F603 A6
F604 B6
F605 B6

SSB: DC-DC Converter

B6 DC-DC CONVERTER

B6

B16 FROM TOP CONNECTORS

+12VSW F701 +12VSW

2704 10u 16V

+5V I706 5704

2706 10u 16V

7708 LF33CPT IN OUT CTRL NC COM

I709 I708

3709 6K8 2708 RES 2709 47u 16V

F710 +3V3STBY 2716 470u 16V

+12VSW I710 5709 10u

2710 22u 16V SUP_GND2

2711 22u 16V SUP_GND2

7710 L6910 PGOOD SIG_GND2 VCC OCSET VREF SS BOOT HGATE PHASE OSC EAREF PGND GND VFB COMP NC Monitor Protection & Ref

3718 10R 2719 100n 3719 680R 2720 1n0 I714 I715

6717 BAS316

7711-1 SI4922DY 7711-2 SI4922DY

2717 100n 2718 100n I711 I712 I716 I717 I718 I719 I720 I721 I723

2721 100n 3720 2R2 3721 2R2 3701 10K 3702 10K

2702 100n SIG_GND2

F717 SIG_GND2

2722 1n0 3722 2K7 2723 47n

3727 1K0 1% SIG_GND2

5717 I725 10u 5713 3u3

2724 1n0 2725 1n0 SS24 6718 3723 10R SUP_GND2

2726 470u 16V 3724 15K 3725 3K3 1% 3726 1K2 I726 2727 10n

FOR 37"-50" LARGE SCREEN

FOR 26"-42" SCREEN

+12VSW 5756

I756 7754 SI2301BDS-T1-E3 11V5 SS = 4V9 I757 5757 120R PAN_VCC 5700 120R F700 LVDS_VCC 11V5

RES 2749 3755 10K 2751 4u7 I747 6V8

2752 47u 16V 2700 RES 2701 100p

B20 TO PACIFIC3

B8 FROM SCALER

7755 PDTC114ET I760 PANEL-PWR-CTL F755 (0V) 0V6

3758 15K 3760 100R 2760 1u0 25V RES

SUPPLY TO SCALER

+12VSW 5752 10u I764 2753 22u 16V GND SUP_GND3

7752 L5970D VCC OUT COMP FB INH SYNC GND VREF I758 I755

2763 22n 2756 220p 3737 4K7 SUP_GND3

5753 220u 6751 SS14 SUP_GND3

RES

3753 1K0 1% I753 1V2 3754 3K3 1% I754 5754 10u F754 +5VSWI 5V4

2757 470u 16V 2758 470u 16V SUP_GND3

B7 TO SCALER CELL B4 TO LIPSYNC

B2 FROM HERCULES

+3V3STBY 3V2 RES 2750 3750 22K 2762 22u 16V 7758 SI4423DY

3759 12K I748 SC_STANDBY 0V 3V1 7756 PDTC114ET

3761 100R I704 2761 1u0 25V RES

2759 100u 16V 3V2 +3V3SW

5751 10u

SUPPLY TO TUNER & HERCULES

+12VSW 5730 10u I731 2730 22u 16V SUP_GND1

7730 L5973D VCC VREF OUT INH SYNC FB COMP GND_GND_HS

I762 3734 100R 6734 BZX384-C6V8 I733

F736 32V9 +VTUN TO TUNER CELL B1

6735 BAV99 2736 22u 35V 6736 BZX384-C33

7735 2N7002 I735 2735 680p

I705 2734 22n 2733 220p I701 3736 4K7 SUP_GND1

5733 33u 6733 SS14 3735 1K0 I734 5735 100u

B2 TO HERCULES CELL

3732 1K0 1% 3733 3K3 1% I732 I736 5737 10u 5V2 F737 +5VSW 8V F738 +8VSW_TV F743 POWER_DOWN B5 B7 B16

+12VSW 5738 120R I702 7738 L78M08CDT IN OUT COM 2738 47u 16V 2739 47u 16V

+3V3STBY 3743 22K 3742 15K I742 7742 BC847BW

+12VSW 6740 PDZ8.2-B I740 3740 1K5 I741 7741 BC847BW 3741 1K5 2741 220n

2731 470u 16V 2737 470u 16V

FOR 37"-50" LARGE SCREEN

3139 123 6117.2

G_16210_006.eps 160106

2700	B11	6736	F6
2701	B11	6740	H1
2702	D1	6751	E10
2704	B2	7708	A5
2706	A3	7710	C2
2708	B4	7711-1	C4
2709	B4	7711-2	D4
2710	B4	7730	F2
2711	B4	7735	F5
2716	B7	7738	G2
2717	D1	7741	H3
2718	D1	7742	H3
2719	C2	7752	D9
2720	C3	7754	B9
2721	D4	7755	C8
2722	E4	7756	G8
2723	E4	7758	G9
2724	C5	F700	B11
2725	C5	F701	B2
2726	C5	F710	B6
2727	D6	F717	D3
2730	F2	F736	F6
2731	H5	F737	G6
2733	F4	F738	G6
2734	F3	F743	G6
2735	F5	F754	F11
2736	F6	F755	C8
2737	H6	I701	F3
2738	G1	I702	G1
2739	G2	I704	G8
2741	H2	I705	F3
2749	B8	I706	A3
2750	F9	I708	B4
2751	B9	I709	B4
2752	B10	I710	B3
2753	D8	I711	D2
2756	E8	I712	D2
2757	F10	I714	C2
2758	F11	I715	C3
2759	G10	I716	D3
2760	C9	I717	D4
2761	G9	I718	D3
2762	G9	I719	D4
2763	E8	I720	D3
3701	D4	I721	D4
3702	D4	I722	E2
3709	B4	I723	E4
3718	C2	I724	C5
3719	C3	I725	C6
3720	D4	I726	C6
3721	D3	I731	E2
3722	E4	I732	G4
3723	D5	I733	F4
3724	C6	I734	F4
3725	C6	I735	F5
3726	C6	I736	G5
3727	E6	I740	H1
3732	G3	I741	H2
3733	G4	I742	H3
3734	E4	I747	B9
3735	G5	I748	G8
3736	G3	I753	F9
3737	E8	I754	F10
3740	H2	I755	D10
3741	H2	I756	B9
3742	H3	I757	B9
3743	G3	I758	E8
3750	G8	I760	C8
3753	F9	I762	E4
3754	F10	I764	D8
3755	B9		
3758	C8		
3759	G8		
3760	C9		
3761	G9		
5700	B11		
5704	A3		
5709	B3		
5713	C6		
5717	C5		
5730	E2		
5733	G4		
5735	G5		
5737	G5		
5738	G1		
5751	H10		
5752	D8		
5753	E10		
5754	F10		
5756	B9		
5757	B10		
6717	C3		
6718	C5		
6733	G4		
6734	F4		
6735	F5		

SSB: Diversity Tables B1-B6

B01

Item nr.	EU non DVB	EU DVB	Description
1152	☑	☐	TUN V+U PLL IEC BGHIL B
	☐	☑	TUNER UV1318SD/A CP H N-4
3163	☑	☐	RST SM 0603 100R PM5 COL
3164	☑	☐	RST SM 0603 100R PM5 COL
5152	☐	☑	FXDIND SM 1008 1U PM5 COL R
	☑	☐	FXDIND SM 1008 6U8 PM5 COL R
5157	☐	☑	FXDIND 0603 100MHZ 600R COL R
5158	☐	☑	FXDIND 0603 100MHZ 600R COL R

B02

Item Nr.		/93 China	AP 10pg TXT	EU 10pg TXT	EU 10pg TXT DVB	EU 1000pg TXT	EU 1000pg TXT DVB	Description
2203	319803041090	☑	☑	☑	☑	☐	☐	ELCAP SM 16V 10U PM20 COL R
2244	319803571040	☐	☐	☑	☑	☑	☑	CER2 0402 Y5V 16V 100N COL
2245	319803571040	☐	☐	☑	☑	☑	☑	CER2 0402 Y5V 16V 100N COL
2246	319803571040	☐	☐	☑	☑	☑	☑	CER2 0402 Y5V 16V 100N COL
2280	202055200005	☐	☑	☐	☑	☑	☑	CER2 0603 X5R 6V3 4U7 PM10 R
2281	202055200005	☐	☑	☐	☑	☑	☑	CER2 0603 X5R 6V3 4U7 PM10 R
2289	319802131510	☐	☐	☑	☑	☑	☑	RST SM 0603 150R PM5 COL
2290	222224059872	☐	☐	☑	☑	☑	☑	CER2 0805 Y5V 10V 4U7 P8020 R
2291	319803571040	☐	☐	☑	☑	☑	☑	CER2 0402 Y5V 16V 100N COL
3250	319803101010	☑	☑	☑	☑	☐	☐	RST SM 0402 100R PM5 COL
3251	319803101010	☑	☑	☑	☑	☐	☐	RST SM 0402 100R PM5 COL
3252	319803101010	☑	☑	☑	☑	☐	☐	RST SM 0402 100R PM5 COL
3253	319803101010	☑	☑	☑	☑	☐	☐	RST SM 0402 100R PM5 COL
3255	319803190010	☑	☑	☑	☑	☐	☐	RST SM 0402 JUMP. 0R05 COL
3256	319803190010	☑	☑	☑	☑	☐	☐	RST SM 0402 JUMP. 0R05 COL
3257	319803190010	☑	☑	☑	☑	☐	☐	RST SM 0402 JUMP. 0R05 COL
3258	319803101020	☑	☑	☑	☑	☐	☐	RST SM 0402 1K PM5 COL
3259	319803101020	☑	☑	☑	☑	☐	☐	RST SM 0402 1K PM5 COL
3260	319803101020	☑	☑	☑	☑	☐	☐	RST SM 0402 1K PM5 COL
3282	319802131510	☐	☐	☑	☑	☑	☑	RST SM 0603 150R PM5 COL
3294	319803104730	☐	☐	☑	☑	☑	☑	RST SM 0402 47K PM5 COL
3296	319803101010	☐	☐	☐	☑	☐	☑	RST SM 0402 100R PM5 COL
4206	319802190020	☑	☑	☐	☐	☐	☐	RST SM 0805 JUMP. 0R05 COL R
4218	319803190010	☐	☐	☑	☑	☑	☑	RST SM 0402 JUMP. 0R05 COL
4219	319803190010	☐	☐	☑	☑	☑	☑	RST SM 0402 JUMP. 0R05 COL
5218	242254945333	☐	☐	☑	☑	☑	☑	IND FXD 1206 EMI 100MHZ 120R R
6206	319801010660	☐	☐	☐	☑	☐	☑	DIO SIG SM BAT54 SOD323 COL R
7208	319801042310	☑	☑	☑	☑	☐	☐	TRA SIG SM BC847BW (COL) R
7209	319801042310	☑	☑	☑	☑	☐	☐	TRA SIG SM BC847BW (COL) R
7210	319801042310	☑	☑	☑	☑	☐	☐	TRA SIG SM BC847BW (COL) R
7217	935280215557	☐	☐	☑	☑	☐	☐	IC SM TDA15031H/N1C91 (PHSE)Y
	935280366557	☐	☑	☐	☐	☑	☑	IC SM TDA15021H/N1C91 (PHSE) Y
	935280367557	☑	☐	☐	☐	☐	☐	IC SM TDA15011H/N1CD0 (PHSE) Y
7219	319801071090	☐	☐	☑	☑	☑	☑	IC SM 74HC4053D (COL) R

B03

Item Nr.		10pg TXT (w/o OTC)	1000pg TXT (with OTC)	DVB 10pg TXT (w/o OTC)	DVB 1000pg TXT (with OTC	Description
1442	242202519085	☐	☑	☐	☑	CON V 14P M 1.00 SM SR R
3432	319803102720	☐	☐	☑	☑	RST SM 0402 2K7 PM5 COL
6430	934054842115	☑	☑	☐	☐	DIO REG SM PDZ2.4B (PHSE) R
6431	932220595685	☑	☑	☐	☐	DIO SIG SM 1N4148WS-V (VISH) R

B05

Item Nr.		LCD 37" - 50"	LCD 26" - 32"	PDP 42" - 50"	Decription
2612	319801741050	☑	☐	☑	CER2 0603 Y5V 10V 1U COL
2613	319801741050	☐	☑	☐	CER2 0603 Y5V 10V 1U COL
2616	202055200035	☐	☑	☐	CER2 0603 X5R 6V3 2U2 PM10 R
2617	202055200035	☐	☑	☐	CER2 0603 X5R 6V3 2U2 PM10 R
2619	319803024790	☐	☑	☐	ELCAP SM 6V3 47U PM20 COL R
3615	319803101030	☐	☑	☐	RST SM 0402 10K PM5 COL
3616	319803101020	☑	☐	☐	RST SM 0402 1K PM5 COL
	319803190010	☐	☐	☑	RST SM 0402 JUMP. 0R05 COL
3617	319803101020	☑	☐	☑	RST SM 0402 1K PM5 COL
3618	319803102230	☐	☑	☐	RST SM 0402 22K PM5 COL
3619	319803101030	☑	☐	☑	RST SM 0402 10K PM5 COL
3620	319803101030	☑	☐	☐	RST SM 0402 10K PM5 COL
3623	319803104730	☐	☑	☐	RST SM 0402 47K PM5 COL
3625	319803103320	☐	☑	☐	RST SM 0402 3K3 PM5 COL
3627	319803102230	☐	☑	☐	RST SM 0402 22K PM5 COL
3628	319803101030	☑	☐	☑	RST SM 0402 10K PM5 COL
3629	319803102230	☑	☐	☑	RST SM 0402 22K PM5 COL
3630	319803102220	☑	☐	☑	RST SM 0402 2K2 PM5 COL
	319803103310	☐	☑	☐	RST SM 0402 330R PM5 COL
3631	319803102220	☑	☐	☑	RST SM 0402 2K2 PM5 COL
	319803103310	☐	☑	☐	RST SM 0402 330R PM5 COL
3632	232270570569	☑	☐	☑	RST SM 0402 RC31 56R PM5 R
3633	232270570569	☑	☐	☑	RST SM 0402 RC31 56R PM5 R
4601	319802190030	☑	☐	☑	RST SM 0603 JUMP. 0R05 COL
4602	319802190030	☐	☑	☐	RST SM 0603 JUMP. 0R05 COL
4603	319802190030	☐	☑	☐	RST SM 0603 JUMP. 0R05 COL
4606	319802190030	☑	☐	☑	RST SM 0603 JUMP. 0R05 COL
4609	319802190030	☐	☑	☐	RST SM 0603 JUMP. 0R05 COL
4610	319802190030	☐	☑	☐	RST SM 0603 JUMP. 0R05 COL
4611	319802190030	☐	☑	☐	RST SM 0603 JUMP. 0R05 COL
4612	319802190030	☐	☑	☐	RST SM 0603 JUMP. 0R05 COL
4613	319802190030	☐	☑	☐	RST SM 0603 JUMP. 0R05 COL
4614	319802190030	☑	☐	☑	RST SM 0603 JUMP. 0R05 COL
4615	319802190030	☑	☐	☑	RST SM 0603 JUMP. 0R05 COL
4618	319802190030	☑	☐	☑	RST SM 0603 JUMP. 0R05 COL
4619	319802190030	☑	☐	☑	RST SM 0603 JUMP. 0R05 COL
7603	319801042310	☑	☐	☐	TRA SIG SM BC847BW (COL) R
7604	319801042310	☑	☐	☑	TRA SIG SM BC847BW (COL) R
7607	319801042310	☐	☑	☐	TRA SIG SM BC847BW (COL) R

B06

Item Nr.		PDP - 42" - 50"	LCD 26" - 32"	LCD 37" - 42"	Description
2701	319803401010	☐	☑	☑	CER1 0402 NP0 50V 100P COL
2702	319803571040	☑	☐	☑	CER2 0402 Y5V 16V 100N COL
2706	319803041090	☑	☐	☑	ELCAP SM 16V 10U PM20 COL R
2709	319803044790	☑	☐	☑	ELCAP SM 16V 47U PM20 COL R
2710	202055200211	☑	☐	☑	CER2 1210 X5R 16V 22U PM10 R
2711	202055200211	☑	☐	☑	CER2 1210 X5R 16V 22U PM10 R
2717	319803571040	☑	☐	☑	CER2 0402 Y5V 16V 100N COL
2718	319803571040	☑	☐	☑	CER2 0402 Y5V 16V 100N COL
2719	319803571040	☑	☐	☑	CER2 0402 Y5V 16V 100N COL
2720	319803501020	☑	☐	☑	CER2 0402 X7R 50V 1N COL
2721	319803571040	☑	☐	☑	CER2 0402 Y5V 16V 100N COL
2722	319803501020	☑	☐	☑	CER2 0402 X7R 50V 1N COL
2723	319803574730	☑	☐	☑	CER2 0402 Y5V 16V 47N COL
2724	319801631020	☑	☐	☑	CER1 0603 NP0 25V 1N COL
2725	319801631020	☑	☐	☑	CER1 0603 NP0 25V 1N COL
2726	202002100097	☑	☐	☑	ELCAP SM SGV 16V 470U PM20 R
2727	319803521030	☑	☐	☑	CER2 0402 X7R 16V 10N COL
2741	319801732240	☑	☐	☐	CER2 0603 X7R 10V 220N COL
	222224059872	☐	☑	☑	CER2 0805 Y5V 10V 4U7 P8020 R
2752	319803044790	☐	☑	☑	ELCAP SM 16V 47U PM20 COL R
3701	319803101030	☑	☐	☑	RST SM 0402 10K PM5 COL
3702	319803101030	☑	☐	☑	RST SM 0402 10K PM5 COL
3709	319803106820	☑	☐	☑	RST SM 0402 6K8 PM5 COL
3718	232275061009	☑	☐	☑	RST SM FUSE 1206 10R PM5 R
3719	319803106810	☑	☐	☑	RST SM 0402 680R PM5 COL
3720	319802132280	☑	☐	☑	RST SM 0603 2R2 PM5 COL
3721	319802132280	☑	☐	☑	RST SM 0603 2R2 PM5 COL
3722	319803102720	☑	☐	☑	RST SM 0402 2K7 PM5 COL
3723	319802151090	☑	☐	☑	RST SM 0805 10R PM5 COL R
3724	319803101530	☑	☐	☑	RST SM 0402 15K PM5 COL
3725	232270463302	☑	☐	☑	RST SM 0603 RC22H 3K3 PM1 R
3726	319803101220	☑	☐	☑	RST SM 0402 1K2 PM5 COL
3727	232270461002	☑	☐	☑	RST SM 0603 RC22H 1K PM1 R
3740	319803101520	☑	☐	☑	RST SM 0402 1K5 PM5 COL
3741	319803101520	☑	☐	☑	RST SM 0402 1K5 PM5 COL
3742	319803101530	☑	☐	☑	RST SM 0402 15K PM5 COL
3743	319803102230	☑	☐	☑	RST SM 0402 22K PM5 COL
3750	319803102230	☐	☑	☐	RST SM 0402 22K PM5 COL
3755	319803101030	☐	☑	☑	RST SM 0402 10K PM5 COL
3758	319803101530	☐	☑	☑	RST SM 0402 15K PM5 COL
3759	319803101230	☐	☑	☐	RST SM 0402 12K PM5 COL
5700	242254945333	☐	☑	☑	IND FXD 1206 EMI 100MHZ 120R R
5704	242254945333	☑	☐	☑	IND FXD 1206 EMI 100MHZ 120R R
5709	242253594134	☑	☐	☑	IND FXD SM 7032 10U PM20 R
5713	242253601218	☑	☐	☑	IND FXD SM DRH104RNP 3U3 PM30
5717	242253600671	☑	☐	☑	IND FXD SM 12575 10U PM20 R
5754	242253594134	☐	☐	☐	IND FXD SM 7032 10U PM20 R
5756	242254945333	☐	☑	☑	IND FXD 1206 EMI 100MHZ 120R R
5757	242254945333	☐	☑	☑	IND FXD 1206 EMI 100MHZ 120R R
6717	319801010630	☑	☐	☑	DIO SIG SM BAS316 (COL) R
6718	319801010720	☑	☐	☑	DIO REC SS24 COL R
6740	934054857115	☑	☐	☑	DIO REG SM PDZ8.2B (PHSE) R
6751	319801010710	☐	☐	☐	DIO REC SS14 COL R
7708	932213916668	☑	☐	☑	IC SM LF33CPT (ST00) R
7710	932218277668	☑	☐	☑	IC SM L6910 (ST00) R
7711	932216070668	☑	☐	☑	FET POW SM SI4936ADY-E3(VISH)R
7741	319801042310	☑	☐	☑	TRA SIG SM BC847BW (COL) R
7742	319801042310	☑	☐	☑	TRA SIG SM BC847BW (COL) R
7754	932221400668	☐	☑	☑	FET POW SM SI2301BDS-E3(VISH)R
7755	319801044110	☐	☐	☑	TRA SIG SM PDTC114ET (COL) R
7756	319801044110	☐	☑	☐	TRA SIG SM PDTC114ET (COL) R
7758	932221214668				FET POW SM SI4423DY-E3 (VISH)R

G_16210_065.eps
190106

SSB: Scaler

B7 SCALER

B7

1 2 3 4 5 6 7 8 9 10 11 12 13 14 15

A B C D E F G H I

+2V5_DDR F800 2800 100u 16V 2801 2802 2803 2804 2805 2806 2807 2808 2809 2810 2811 2812 100n I813

B11 FROM FLASH / CONTROL #RESET K1 RESET_

B10 FROM SDRAM FSVREF 3800 10K R4 F801 J24 FSVREF1 K26 FSVREFVSS1 2813 100n 2814 100n W25 FSVREF2 W24 FSVREFVSS2

+2V5_DDR +2V5_DDR +1V8_CORE 7801-12 GM1501-LF-CF SYSTEM FS_2.5 FS_2.5 VDDA18_DLL

M3 IR0|GPIO_29 M4 IR1|GPIO_28 EXTCLK|GPI_02

FSDATA(0) 3801-4 5 22R FSDATAU0 E24 FSDATA0 … FSDATA(31) 3808-1 1 8 22R FSDATAU28 FSDATA28

FSDATAU0 … FSDATAU31 FSDATA0 … FSDATA31

FSADDR0 … FSADDR11 AD25 FSADDRU0 … AA24 FSADDRU11 3809-4 4 5 22R FSADDR(3) … 3811-1 1 8 22R FSADDR(11)

FSBKSEL0 Y25 FSBKSELU0 FSBKSEL1 Y26 FSBKSELU1

FSDQM0 T25 FSDQMU0 … FSDQM3 T24 FSDQMU3 3812-1 1 8 22R FSDQM(0) … 3812-4 4 5 22R FSDQM(3)

FSCKE W26 FSCKEU FSWE V26 FSWEU FSCAS V25 FSCASU FSRAS V24 FSRASU 3813-1 1 8 22R FSWE … 3813-4 4 5 22R FSCKE

FSCLKn U23 FSCLK- FSCLKp U24 FSCLK+

FSDQS L26 3816 22R FSDQS

MSTR_SCL|GPI_03 P4 MSTR_SDA|GPI_04 P3 3817 10K 3818 10K SCL_IO SDA_IO +3V3SW

B9 TO SCALER INTRF B11 TO FLASH CONTROL B12 TO HDMI B20 TO PACIFIC3

K25 VSSA18_DLL

+3V3_PLL F802 2815 22u 16V 2816 100n 2817 100n 2818 100n 2819 100n 2820 100n 2821 100n 2822 100n

7801-11 GM1501-LF-CF CLK-SYN H3 J3 F4 G1 H1 J1 F2

+3V3_PLL 2823 22p G3 TCLK +3V3_PLL 2824 22p XTAL G4 K2 ACS_RSET_HD I801 3824 3K3 1801 14M31818 SMD-49

VDDA33_SDDS VDDA33_DDDS VDDA33_RPLL VDDA33_FPLL VSSA33_SDDS VSSA33_DDDS VSSA33_RPLL VSSA33_FPLL VSSD33_SDDS VSSD33_DDDS VSSD33_PLL VDDD33_SDDS VDDD33_DDDS VDDD33_PLL

H2 J2 F3 H4 J4 K4 G2

B11 TO FLASH / CONTROL

7801-4 GM1501-LF-CF OCM-ADR

OCMADDR(0) … OCMADDR(9) AA1 … V1 OCMADDR0 … OCMADDR9|GPIO_G11_B1 OCMADDR(10) … OCMADDR(19) V2 … T3

7801-5 GM1501-LF-CF OCM_DATA

OCMDATA(0) … OCMDATA(7) AD4 … AE1 OCMDATA0 … OCMDATA7 OCMDATA8|GPIO_G10_B0 … OCMDATA15|GPIO_G10_B7

3825-3 3 6 3825-2 2 7 3825-1 1 8 I802 AC1 3826-3 3 6 3826-1 1 8 I803 AC3 3825-4 4 5 3826-2 2 7 3826-4 4 5 10K

OCM_TIMER1|PWM3|GPIO_13 D25 I804 BU_LHT_ADJ1 B9 TO SCALER INTRF

OCM_UDI|GPIO_27 M2 UART_RX B1 TO TUNER

OCM_UDO|GPIO_26 M1 UART_TX

OCM_INT1|GPIO_30 L2 I805 POWER_DOWN B6 TO DC-DC CONVERTER

OCM_INT2|GPI_10 L1 V-CHIP_INT (RESERVED)

OCM_WE R3 #OCM_WE

OCM_RE R2 #OCM_RE

OCM_CS0_|GPIO_23 T4 I806 3827 10K OCM_CS1_|GPIO_24 P1 I807 3828 10K OCM_CS2_|GPIO_25 P2 I808 3829 10K +3V3SW

ROM_CS_|GPI_9 R1 #ROM_CS

B3B-PH-SM4-TBT(LF) FOR SW TESTING (RES) 1802

+3V3_IO 3837 10K 3838 10K I811 F803 F804

B19 TO COLUMBUS +3V3SW 3819 RES

7801-6 GM1501-LF-CF VIDEO

3820 10K I812 B17 VCLAMP|GPIO_31 COL_DE I818 D20 VDV|VSOG|GPIO07 3839 100R I815 B20 VODD|HSOUT|GPIO_06 V_1FH I800 C20 VVS|GPIO_05 H_1FH I816 D19 VHS_CSYNC|GPIO_04

FROM SYNC INTERFACE B3

COL_YB(1) … COL_YB(8) A23 … B21 VGRN0|GPIO_G02_B0 … VGRN7|GPIO_G02_B7

COL_Do(1:7) COL_Do(1) … COL_Do(7) C19 … C17 VRED0|GPIO_G01_B0 … VRED7|GPIO_G01_B7

HDMI_CbCr(0:7) HDMI_CbCr(0) … HDMI_CbCr(7) B25 … B23 VBLU0|GPIO_G03_B0 … VBLU7|GPIO_G03_B7

FROM MUX-SYNC INTF B13 COL_Do(8)_INV 3840 22R

SVCLK|GPI_0 D16 3823 RES HDMI_VCLK SVHSYNC|GPIO_02 C14 H_HDMI SVVSYNC|GPIO_01 B14 V_HDMI SVODD|GPIO_00 A14 I823 3822 100R HDMI_VDV

SVDV|VCOAST|GPIO_03 A17 HDMI_Y(7:0)

SVDATA7|GPIO_G00_B7 D14 … SVDATA0|GPIO_G00_B0 A16 HDMI_Y(7) … HDMI_Y(0)

VCLK|GPI_01 A20 I817 COL_CLKASB B19 4901 COL_CLKASA B18

B12 FROM HDMI HDMI_PD HDMI_PL HDMI_INT FROM COLUMBUS B18/B19

B12 FROM HDMI

B22/B14 FROM DIGITAL-IO B18 TO ADC

B23/B15B FROM ANALOG-IO +3V3_IO 3842 10K

7801-9 GM1501-LF-CF GPIO

Analog_AudioSEL2 DMMI_SC2_REC_SEL ADC_RESET

GPIO_G04_B0|DOBLU2 … GPIO_G04_B7|DOBLU9 AD23 … AE26

GPIO_G05_B0|DOGRN2 … GPIO_G05_B3|DOGRN5 AD23 … AD22

GPIO_G06_B0|DORED2 … GPIO_G06_B3|DORED5 AC18 … AD18

GPIO_G07_B0|DERED2 … GPIO_G07_B7|DERED9 AE8 … AE10

GPIO_G08_B0|JTAG_CLK|DORED0 … GPIO_G08_B5|JTAG_RESET|DOBLU1 AD6 … AD8

GPIO_G09_B0|DERED0 … GPIO_G09_B5|DEBLU1 AE4 … AE5

GPIO_14|DHS AF17 GPIO_15|DVS AD16 GPIO_16|DEN AD7

B3 TO SYNC INTF B20 TO PACIFIC3 +3V3_IO 3830 RES

HDMI_HOTPLUG_RESET RESET_FLASH PIXEL+_RESET Analog_AudioSEL1 CVI_VGA_SEL (RES - CINCH ONLY)

3831 100R PDP_GO_UP I819 3832 100R VS_ON I824 POWER_UP_OK I820 INT_OTC

SD_HD_SEL

I809 3834 10K JTAG_CLK_SCL I810 3835 10K JTAG_TDI_SDA I822 3836 10K PC_HD_SEL

TO MUX-SYNC INTF B13

SC2|AV2_SIDE_SW RGB|CVI_HDA_SEL TV_SC_COM TV_IRQ NVM_WP_SCALER SC2_OUT_SW Y_NOTCH

+3V3_IO 3841 10K COL_RST B11 TO FLASH / CONTROL B19 TO COLUMBUS

TO ANALOG-IO B15A (SCART) TO HERCULES B2

TO TOP CONN. B16

3139 123 6117.2

G_16210_007.eps 160106

1801 B13	7801-5 E12
1802 F15	7801-6 F5
2800 A1	7801-9 G11
2801 A1	F800 A1
2802 A2	F801 C3
2803 A2	F802 A10
2804 A2	F803 G15
2805 A2	F804 G15
2806 A2	I800 G3
2807 A3	I801 B13
2808 A3	I802 F10
2809 A3	I803 F10
2810 A3	I804 E13
2811 A4	I805 F13
2812 A4	I806 F13
2813 C3	I807 F13
2814 C3	I808 F13
2815 A10	I809 G13
2816 A10	I810 H13
2817 A10	I811 G15
2818 A10	I812 G3
2819 A10	I813 A1
2820 A12	I815 G3
2821 A13	I816 G3
2822 A13	I817 H6
2823 B10	I818 G3
2824 B13	I819 I10
3800 B3	I820 I10
3801-1 C2	I822 H13
3801-2 C2	I823 G6
3801-3 C2	I824 I10
3801-4 C2	
3802-1 D2	
3802-2 C2	
3802-3 C2	
3802-4 C2	
3803-1 D2	
3803-2 D2	
3803-3 D2	
3803-4 D2	
3804-1 D2	
3804-2 D2	
3804-3 D2	
3804-4 D2	
3805-1 E2	
3805-2 E2	
3805-3 D2	
3805-4 D2	
3806-1 E2	
3806-2 E2	
3806-3 E2	
3806-4 E2	
3807-1 E2	
3807-2 E2	
3807-3 E2	
3807-4 E2	
3808-1 F2	
3808-2 E2	
3808-3 F2	
3808-4 F2	
3809-1 B7	
3809-2 B7	
3809-3 B7	
3809-4 B7	
3810-1 C7	
3810-2 C7	
3810-3 C7	
3810-4 C7	
3811-1 C7	
3811-2 C7	
3811-3 C7	
3812-1 C7	
3812-2 D7	
3812-3 C7	
3812-4 D7	
3813-1 D7	
3813-2 D7	
3813-3 D7	
3813-4 D7	
3814 D7	
3815 D7	
3816 E7	
3817 E6	
3818 E6	
3819 F3	
3820 G2	
3822 G6	
3823 G6	
3824 B13	
3825-1 F10	
3825-2 F10	
3825-3 F10	
3825-4 F10	
3826-1 F10	
3826-2 F10	
3826-3 F10	
3826-4 F10	
3827 F13	
3828 F13	
3829 F13	
3830 H10	
3831 I9	
3832 I9	
3834 G13	
3835 H13	
3836 H13	
3837 G14	
3838 G14	
3839 G3	
3840 I3	
3841 H15	
3842 G10	
4801 H6	
7801-11 A11	
7801-12 B4	
7801-4 C12	

SSB: Scaler

B8 SCALER

SUPPLY FOR SCALER

+3V3SW
5900 → +3V3_PLL
5901 → +3V3_ADC
5902 → +3V3_DVI
5903 → +3V3_IO
5904 F900 → +3V3_LBADC
5905 → +3V3_LVDSA
5906 → +3V3_LVDSB
5907 → +3V3_LVDS

+3V3SW — 7900 LF25CDT (IN / OUT / COM) — I900 — 5908 → +2V5_DDR
2900 100n | 2901 1n0 | + 2902 100u 16V | + 2960 100u 16V

+3V3SW — 7901 LD1086D2T18 (IN / OUT / COM) — I901 — I902 +1V8
2903 100n | + 2904 47u 16V
5909 → +1V8_ADC
5910 → +1V8_DVI
5911 → +1V8_CORE

+3V3_IO — F901 — +2905 100u 16V | 2906 2907 2908 2909 2910 2911 2912 2913 2914 2915 2916 100n
+1V8_CORE — F902 — + 2917 100u 16V | 2918 2919 2920 2921 2922 2923 2924 2925 2926 2927 2928 2929 100n

7801-13 GM1501-LF-CF SUPPLY
+3V3_IO: AC10 AC8 AC6 AC4 AB4 AA4 Y4 W4 D23 D22 D17 (IO_3.3)
+1V8_CORE: U17 U16 U11 U10 T17 T16 T11 T10 L16 L11 K17 K16 K11 K10 (CORE_1.8)
D_GND D_GND D_GND
A13 B13 K12 K13 K14 K15 L10 L12 L13 L14 L15 L17 M10 M11 M12 M13 M14 M15 M16 M17 N10 N11 N12 N13 N14 N15 N16 N17 P10 P11 P12 P13 P14 P15 P16 P17 R10 R11 R12 R13 R14 R15 R16 R17 T10 T12 T13 T14 T15 U12 U13 U14 U15 AD15
I905

F903 — 2930 2931 2932 2933 100n — +1V8_DVI
F904 — + 2934 47u 16V | 2935 2936 2937 2938 2939 100n — +3V3_DVI

7801-2 GM1501-LF-CF DVI
DVI_1.8: D6 D8 D9 D10
DVI_3.3: C11 C10 C9 C8 C6
N4 DVI_SCL|GPI_07
N3 DVI_SDA|GPI_08
A6 RXCp
B6 RXCn
A8 RX0p
B8 RX0n
A9 RX1p
B9 RX1n
A10 RX2p
B10 RX2n
B11 REXT
NC
DVI_GND: A7 A11 B5 B7 C7 D7 D11
I906

7801-14 GM1501-LF-CF NC
NC A1 | NC C5 | NC D5 | NC NC | AC17 NC | K3 NC | F1 NC

+3V3_LBADC
+ 2940 47u 16V | 2941 100n
7801-3 GM1501-LF-CF ADC
C13 LBADC_33
I908
C12 LBADC_IN1
(RES) B12 LBADC_IN2
(RES) A12 LBADC_IN3
D12 LBADC_RETURN
LBADC_GND D13
2942 100n
KEYBOARD 4900 RES
B2

7801-10 GM1501-LF-CF DISPLAY PWR
AD19 LVDSA_GND_1
AC19 LVDSA_GND_2
AC20 LVDSA_GND_3
AC13 LVDSB_GND_1
AC14 LVDSB_GND_2
AC15 LVDSB_GND_3
AD17 VSSD33_LVDS
AE17 VDDD33_LVDS
AC22 LVDSA_3.3_3
AC21 LVDSA_3.3_2
AD20 LVDSA_3.3_1
AC12 LVDSB_3.3_3
AD13 LVDSB_3.3_2
AD12 LVDSB_3.3_1
+3V3_LVDS — F905 — 2949 100n
+3V3_LVDSA — F906 — + 2945 22u 16V | 2946 2947 2948 100n
+3V3_LVDSB — F907 — + 2950 22u 16V | 2951 2952 100n

B13 TO MUX-SYNC INTERFACE
B2 HERCULES
AVSYNC L3
AHSYNC L4
SCL N2
SDA N1
SOG C3
R_PR+ D2
R_PR- D1
G_Y+ C2
G_Y- C1
B_PB+ B2
B_PB- B1

+3V3STBY — 3901 RES | 3902 RES — 2953 2954 100n — F908 — +1V8_ADC
+3V3_ADC — F909 — + 2955 22u 16V | 2956 2957 2958 2959 100n
7801-1 GM1501-LF-CF ANA-IN
ADC_1.8: A4 A5
ADC_3.3: B3 E3 D3 A2
I907 3903 100R 3904 100R
VGA_SCL|GPI_05
VGA_SDA|GPI_06
REDp REDn GREENp GREENn BLUEp BLUEn
ADC_AGND ADC_DGND
C4 D4 E1 E2 E4 A5 B4 — F910

B16 — 7801-7 GM1501-LF-CF CTRL
3900 3K3 I904 AC16 OEXTR
FAN_SPEED C26 PWM0|GPIO_10
HD_FILTER C25 PWM1|GPIO_11
PPWR|GPIO_08 A26 PANEL-PWR-CTL
PBIAS|GPIO_09 B26 LAMP_ON_OFF
DCLK|GPIO_17 AC7 NC
PWM2|GPIO_12 D26 I903 BU_LHT_ADJ2 (RES)
FROM DC-DC CONVERTER B6
B20 TO PACIFIC-3 & B16 TO TOP CONN.

3139 123 6117.2
G_16210_008.eps 160106

2900 D1 F903 C5
2901 D2 F904 C7
2902 D2 F905 D10
2903 E1 F906 D10
2904 E2 F907 D10
2905 A4 F908 E9
2906 A4 F909 E10
2907 A4 F910 G9
2908 A4 I900 C2
2909 A5 I901 E1
2910 A5 I902 E2
2911 A5 I903 G6
2912 A5 I904 F4
2913 A5 I905 C4
2914 A6 I906 E6
2915 A6 I907 F8
2916 A6 I908 B10
2917 A7
2918 A7
2919 A7
2920 A7
2921 A8
2922 A8
2923 A8
2924 A8
2925 A8
2926 A9
2927 A9
2928 A9
2929 A9
2930 C5
2931 C5
2932 C5
2933 C5
2934 C7
2935 C7
2936 C7
2937 C8
2938 C8
2939 C8
2940 B10
2941 B10
2942 C9
2945 D10
2946 D11
2947 D11
2948 D11
2949 D11
2950 D10
2951 D11
2952 D11
2953 E8
2954 E8
2955 E10
2956 E10
2957 E11
2958 E11
2959 E11
2960 D2
3900 F4
3901 E8
3902 E8
3903 F8
3904 F8
4900 B9
5900 A1
5901 B1
5902 B1
5903 B1
5904 B1
5905 C1
5906 C1
5907 C1
5908 C3
5909 D3
5910 E3
5911 E3
7801-1 F9
7801-10 C9
7801-13 B6
7801-14 A10
7801-2 C6
7801-3 B10
7801-7 F5
7900 C1
7901 D1
F900 B2
F901 A4
F902 A7

SSB: Scaler Interface

B9 SCALER INTERFACE

B9

7801-8
GM1501-LF-CF

ACp|GPIO_G06_B6|DORED8 AE20
ACn|GPIO_G06_B7|DORED9 AF20
A3p|GPIO_G06_B4|DORED6 AE19
A3n|GPIO_G06_B5|DORED7 AF19
A2p|GPIO_G05_B1|DOGRN3 AE21
A2n|GPIO_G05_B2|DOGRN4 AF21
A1p|GPIO_G05_B4|DOGRN6 AE22
A1n|GPIO_G05_B5|DOGRN7 AF22
A0p|GPIO_G05_B6|DOGRN8 AE23
A0n|GPIO_G05_B7|DOGRN9 AF23
NC
SHIELD5|DEBLU5 AD14
SHIELD4|DEBLU2 AE13
SHIELD3|DEGRN5 AE11
SHIELD2|DEGRN4 AD11
SHIELD1|DEGRN3 AC11
SHIELD0|DEGRN2 AF10
BCp|DEGRN8 AE12
BCn|DEGRN9 AF13
B3p|DEGRN6 AF11
B3n|DEGRN7 AF12
B2p|DEBLU3 AF14
B2n|DEBLU4 AE14
B1p|DEBLU6 AF15
B1n|DEBLU7 AE15
B0p|DEBLU8 AF16
B0n|DEBLU9 AE16
LVDS

TXBC+ TXBC- TXB3+ TXB3- TXB2+ TXB2- TXB1+ TXB1- TXB0+ TXB0-

B20 TO PACIFIC3

B7 TO SCALER

BU_LHT_ADJ1

3A02 1K0

RESERVED

IA07 4A02 RES

IA05 BACKLIGHT_DIM

B20 FROM PACIFIC3

BACKLIGHT CONTROL

	5V DC	5V PWM	3V3 DC	3V3 PWM
3A03	390R	390R	-	-
3A05	-	-	-	-
3A04	1K	1K	-	-
7A01	Y	Y	-	-
4A03	-	-	Y	Y
3A06	10K	0R	10K	0R
2A03	1u	-	1u	-

RES +5VSWI
3A03 RES
3A05 RES
7A01 SI2301DS-T1
IA06 3A06 10K
IA00 2A03 1u0
3A04 1K0
BACKLIGHT_CTRL

B16 TO TOP CONNECTORS

*4A03

FOR LARGE SCREEN 37"~50"

+3V3STBY 3A11 4K7
+3V3STBY 2A13 100n 3A13 10K
+5V 3A14 4K7
7A02 BC847BW
7A03 BC847BW
3A10 10K IA03 2A12 10n
6A01 BZX384-C3V9
STANDBY

FOR PDP ONLY

+3V3SW 3A07 10K 3A08 10K
+3V3SW 5A00
2A00 100n
7A00 PCA9515ADP
VCC SDA1 SDA0 SCL1 SCL0 EN GND NC NC
SDA_DMA_BUS1_DISP 3A00 68R IA08
SCL_DMA_BUS1_DISP 3A01 68R IA09
SDA_IO SCL_IO
2A01 100p 2A02 100p
4A00_RES 4A01_RES

B20 TO PACIFIC3

B2 FROM HERCULES

SC_STANDBY
4A04 (PDP) BUF_ENABLE
4A05 4A06

FOR PDP DVB ONLY

7A04 BC847BW
3A15 3K3
3A16 10K IA10 2A14 10n
LS|PDP_DVB_SEMISTANDBY
RESERVED

3139 123 6117.2

G_16210_009.eps
160106

2A00 E3
2A01 F2
2A02 F2
2A03 C7
2A12 E6
2A13 D8
2A14 F8
3A00 E2
3A01 E2
3A02 C5
3A03 C6
3A04 C6
3A05 C6
3A06 C7
3A07 E2
3A08 E2
3A10 E6
3A11 D7
3A13 D8
3A14 D9
3A15 F9
3A16 F8
4A00 F3
4A01 F3
4A02 B6
4A03 D6
4A04 F4
4A05 F6
4A06 F8
5A00 E3
6A01 E9
7801-8 A2
7A00 E4
7A01 C6
7A02 E6
7A03 E8
7A04 F8
IA00 C7
IA03 E6
IA05 B8
IA06 C7
IA07 B6
IA08 E3
IA09 E3
IA10 F8

SSB: SDRAM

B10 SDRAM

+2V5_DDR

2B01 47u 16V
2B02 47u 6.3V
2B03 100n
2B04 100n
2B05 100n
2B06 100n
2B07 100n
2B08 100n
2B09 100n
2B10 100n
2B11 100n
2B12 100n
2B13 100n
2B14 100n
2B15 100n
2B16 100n

B 7 TO/FROM SCALER

+2V5_DDR
3B01 10K 1%
FSVREF
FB01
3B02 10K 1%

2B19 RES
2B18 16V 22u
2B17 100n

+2V5_DDR

7B01 K4D263238F-UC50
SDRAM 1M X 32 X 4

VREF, VDD, VDDQ, VSS, VSSQ

FSRAS
FSCAS
FSWE
FSCLK+
FSCLK-
FSCKE
3B03 150R 1%
IB03
IB02

FSDQM(0)
FSDQM(1)
FSDQM(2)
FSDQM(3)

FSBKSEL(0)
FSBKSEL(1)

FSADDR(0)
FSADDR(1)
FSADDR(2)
FSADDR(3)
FSADDR(4)
FSADDR(5)
FSADDR(6)
FSADDR(7)
FSADDR(8)
FSADDR(9)
FSADDR(10)
FSADDR(11)

NC
RFU
MCL
DQS
FSDQS

FSDATA(0)
FSDATA(1)
FSDATA(2)
FSDATA(3)
FSDATA(4)
FSDATA(5)
FSDATA(6)
FSDATA(7)
FSDATA(8)
FSDATA(9)
FSDATA(10)
FSDATA(11)
FSDATA(12)
FSDATA(13)
FSDATA(14)
FSDATA(15)
FSDATA(16)
FSDATA(17)
FSDATA(18)
FSDATA(19)
FSDATA(20)
FSDATA(21)
FSDATA(22)
FSDATA(23)
FSDATA(24)
FSDATA(25)
FSDATA(26)
FSDATA(27)
FSDATA(28)
FSDATA(29)
FSDATA(30)
FSDATA(31)

B 7 TO/FROM SCALER

2B01 A1
2B02 A1
2B03 A2
2B04 A2
2B05 A2
2B06 A3
2B07 A3
2B08 A3
2B09 A3
2B10 A4
2B11 A4
2B12 A4
2B13 A5
2B14 A5
2B15 A5
2B16 A5
2B17 B4
2B18 B4
2B19 B4
3B01 B3
3B02 B3
3B03 C3
7B01 C4
FB01 B3
IB02 C3
IB03 C3

3139 123 6117.2

G_16210_010.eps
160106

SSB: Flash / Control

B11 FLASH / CONTROL

B11

+3V3_IO
5C00
FC00
2C00
100n
2C01
10u 16V

7C03
M29W400DT-55N6
EPROM
512Kx8/256Kx16

B 7
TO SCALER

OCMADDR(1) 25
OCMADDR(2) 24
OCMADDR(3) 23
OCMADDR(4) 22
OCMADDR(5) 21
OCMADDR(6) 20
OCMADDR(7) 19
OCMADDR(8) 18
OCMADDR(9) 8
OCMADDR(10) 7
OCMADDR(11) 6
OCMADDR(12) 5
OCMADDR(13) 4
OCMADDR(14) 3
OCMADDR(15) 2
OCMADDR(16) 1
OCMADDR(17) 48
OCMADDR(18) 17

A 0 4M-1

3C22 1K0
3C23 220K FC11
+3V3_IO
#OCM_WE
#OCM_RE
#ROM_CS

RB 15
RP 12
WE 11
OE 28
CE 26
BYTE 47

2C04 10n
2C05 10n

37
27
46

D▽
0 29 OCMDATA(0)
1 31 OCMDATA(1)
2 33 OCMDATA(2)
3 35 OCMDATA(3)
4 38 OCMDATA(4)
5 40 OCMDATA(5)
6 42 OCMDATA(6)
7 44 OCMDATA(7)
8 30
9 32
10 34
11 36
12 39
13 41
14 43
15 45 OCMADDR(0)
A-1

9 10 13 14 16 NC

B 7
TO SCALER

OCMDATA(0:7)
OCMADDR(0:19)

OCMADDR(0) 3C06-1 1 8 10K
OCMADDR(1) 3C06-2 2 7 10K
OCMADDR(2) 3C06-3 3 6 10K
OCMADDR(3) 3C06-4 4 5 10K

OCMADDR(4) 3C07-1 1 8 10K
OCMADDR(5) 3C07-2 2 7 10K
OCMADDR(6) 3C07-3 3 6 10K
OCMADDR(7) 3C07-4 4 5 10K

OCMADDR(8) 3C08-1 1 8 10K
OCMADDR(9) 3C08-2 2 7 10K
OCMADDR(10) 3C08-3 3 6 10K
OCMADDR(11) 3C08-4 4 5 10K

OCMADDR(12) 3C09-1 1 8 10K
OCMADDR(15) 3C09-2 2 7 10K
OCMADDR(17) 3C09-3 3 6 10K
OCMADDR(18) 3C09-4 4 5 10K

OCMADDR(16) 3C10-1 1 8 10K
OCMADDR(14) 3C10-3 3 6 10K
OCMADDR(13) 3C10-4 4 5 10K
OCMADDR(19) 3C10-2 2 7 10K

+3V3_IO
3C04-1 1 8 10K
3C04-2 2 7 10K
3C04-3 3 6 10K
3C04-4 4 5 10K
3C05

+3V3_IO
3C16-4 5
3C17 10K
3C16-3 6 10K
3C16-1 8
3C16-2 7
3C18 10K

FC10
FC09
FC08
FC07
FC06

3C19 RES
3C20 RES
3C21 RES

+3V3SW
3C00 10K
NVM_WP_SCALER 0V FC01 7 WC
SCL_IO 3V2 FC02 6 SCL
SDA_IO 3V2 FC03 5 SDA

+3V3SW
2C02 100n
3V2
8 M24C32-WMN6 7C01
Φ (4Kx8) EEPROM
ADR 0 1 2
1 2 3
4

+3V3SW
3V2
2C03 100n
1C00 SKQR
For Software Development only - (RES)
FC04
0V
3C01 0R
7C02 PST596J
MR SUB VCC GND VOUT
5
2 3
FC05
3V2
3C02 1K0
3C03 RES
#RESET

B 7 & B 1 9
TO SCALER TO COLUMBUS

1C00 E4
2C00 A3
2C01 B3
2C02 E2
2C03 E4
2C04 D1
2C05 D1
3C00 E2
3C01 F4
3C02 E6
3C03 F6
3C04-1 B6
3C04-2 B6
3C04-3 B6
3C04-4 B6
3C05 B6
3C06-1 B5
3C06-2 B5
3C06-3 B5
3C06-4 B5
3C07-1 C5
3C07-2 C5
3C07-3 C5
3C07-4 C5
3C08-1 C5
3C08-2 C5
3C08-3 C5
3C08-4 C5
3C09-1 C5
3C09-2 C5
3C09-3 C5
3C09-4 C5
3C10-1 D5
3C10-2 D5
3C10-3 D5
3C10-4 D5
3C16-1 C7
3C16-2 C7
3C16-3 C6
3C16-4 C6
3C17 C6
3C18 C7
3C19 D6
3C20 D7
3C21 D7
3C22 D1
3C23 D1
5C00 A2
7C01 E3
7C02 E5
7C03 B2
FC00 A2
FC01 E2
FC02 F2
FC03 F2
FC04 F4
FC05 F5
FC06 D6
FC07 D6
FC08 C7
FC09 C7
FC10 C7
FC11 D1

G_16210_011.eps
160106

3139 123 6117.2

SSB: HDMI

2D00 A10	2D10 B2	2D15 B2	2D22 E2	2D30 D1	2D36 E2	2D43 G2	2D48 I3	2D53 G10	2D58 I11	3D03 B10	3D09 A10	3D15-3 C14	3D16-4 C14	3D18 F10	3D20-4 G8	3D22 E14	4D02 G8	5D00 F1	5D05 H2	7D03-1 A11	FD01 B9	FD06 E15	FD11 I2	FD17 A9	ID10 G10	ID19 I14	ID28 G8
2D01 B10	2D11 B2	2D16 B2	2D23 E2	2D31 D1	2D37 E2	2D44 G2	2D49 H5	2D54 G11	2D59 I11	3D05 I4	3D10 B10	3D15-4 C14	3D17-1 B14	3D19 F9	3D21-1 B14	3D23 D14	4D03 H8	5D01 G1	5D06 F1	7D03-2 G6	FD02 B9	FD07 G1	FD12 F1	ID00 H1	ID11 H11	ID20 A9	
2D02 F2	2D12 B1	2D17 B2	2D24 E2	2D32 E1	2D38 E2	2D45 H1	2D50 G9	2D55 G11	3D00 A9	3D06 I4	3D11 E13	3D16-1 D14	3D17-2 B14	3D20-1 G8	3D21-2 B14	3D24 H11	4D04 I4	5D02 G1	7D00 A8	7D03-3 A5	FD03 C9	FD08 G1	FD13 G9	ID01 H2	ID13 E15	ID22 E10	
2D08 B1	2D13 B1	2D18 B2	2D25 E2	2D34 E2	2D39 E2	2D46 H2	2D51 G9	2D56 H10	3D01 A10	3D07 E10	3D15-1 C14	3D16-2 D14	3D17-3 B14	3D20-2 H8	3D21-3 B14	3D26 H11	4D05 I4	5D03 H2	7D01 B8	7D04 G9	FD04 C9	FD09 G1	FD14 H2	ID08 H10	ID14 C15	ID24 I5	
2D09 B1	2D14 B2	2D21 E2	2D29 C1	2D35 E2	2D42 G2	2D47 I2	2D52 G10	2D57 H10	3D02 B9	3D08 E10	3D15-2 C14	3D16-3 D14	3D17-4 A14	3D20-3 H8	3D21-4 B14	3D27 H4	4D06 I4	5D04 I2	7D02 H1	7D05 H4	FD05 E15	FD10 I2	FD15 G9	ID09 H11	ID18 H14	ID25 I4	

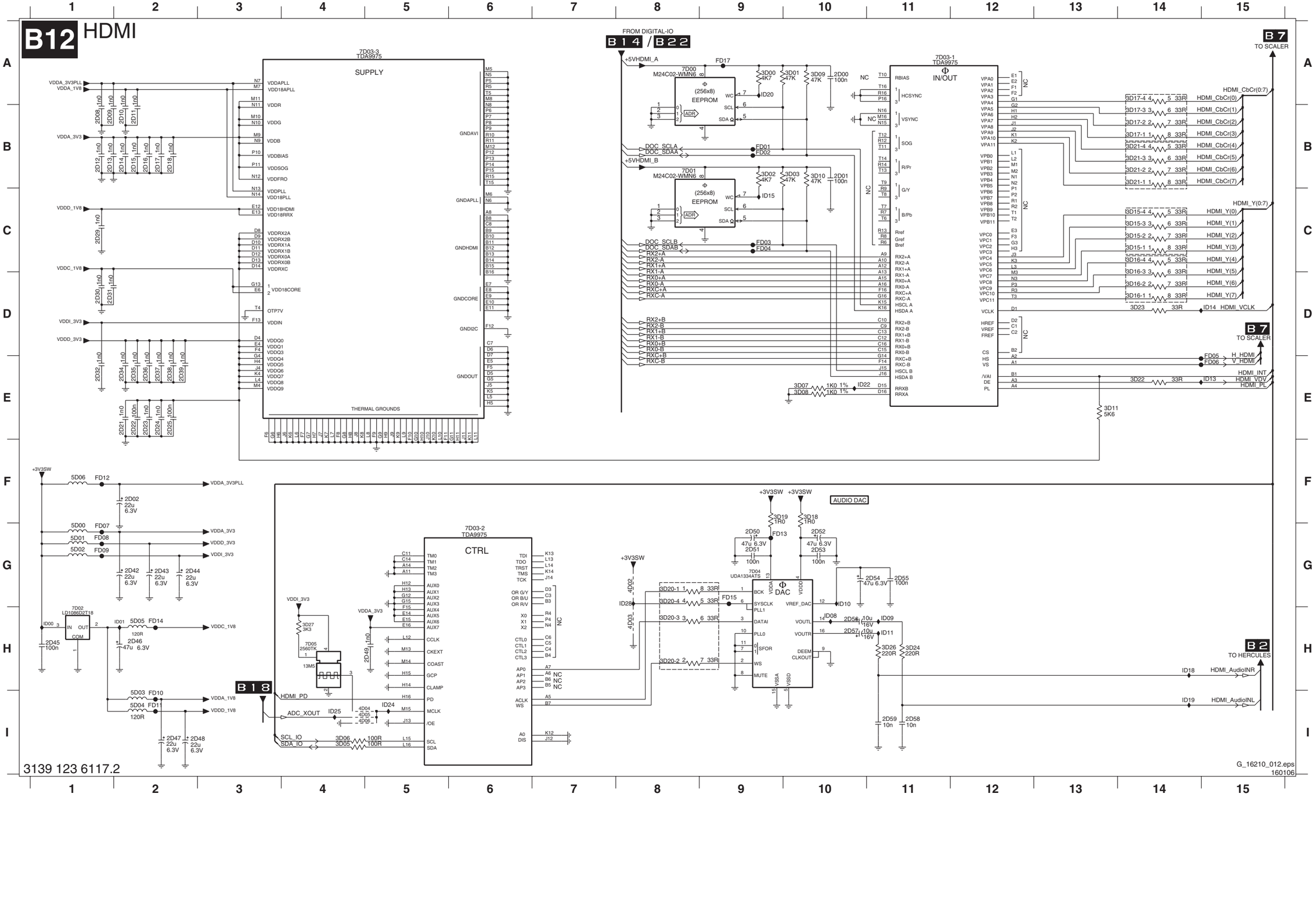

SSB: MUX-Sync Interface

B13 MUX-SYNC INTERFACE

B13

B2/B3 FROM HERCULES / SYNC INTERFACE

R_OTC_SDTV FE00
G_OTC_SDTV FE01
B_OTC_SDTV FE02

(SCART) (CINCH)
B15B/B23 FROM ANALOG-IO

SC1_CVI_DMMI_R_Pr_IN
SC1_CVI_DMMI_G_Y_IN
SC1_CVI_DMMI_B_Pb_IN

RINA|Pr
GINA|YINA
BINA|Pb

B15A/B23 (SCART) (CINCH)

+5VSWI
5E00 IE00 2E03 100n

7E00 ADG733BRU
VDD EN A0 A1 A2 S1A S1B S2A S2B S3A S3B D1 D2 D3 VSS GND

RGB|CVI_HDA_SEL FE03

B7 FROM SCALER
SD_HD_SEL 3V2

RGB TEXT FOR

*	HER	OTC
3E13	330R	JMP
3E14	330R	JMP
3E15	330R	JMP
3E16	330R	RES
3E17	330R	RES
3E18	330R	RES

SC1_R_CVI_Pr_IN
SC1_G_CVI_Y_IN
SC1_B_CVI_Pb_IN

HD_FILTER 0V IE03 3E22 100K
2E13 1u0 2E14 33p 3E23 820R
3E57 10R

B8 TO SCALER

7E01 SM5301BS-G
DISABLE THROUGH MUXSEL GSR1 RINA|YINA RINB|YINB GSG1 GINA|UINA GINB|UINB GSB1 BINA|VINA BINB|VINB RFC VFC
ROUT|YOUT GOUT|UOUT BOUT|VOUT
NC1 NC2 NC3
GND GND_HS FE07

FOR CINCH ONLY
+5VSWI 5E02 IE08 2E15 100n
7E02 ADG781BCP
VDD SPST SWITCH NC NC S1 S2 S3 S4 D1 D2 D3 D4 IN1 IN2 IN3 IN4 GND_HS GND

B7 TO SCALER
B8 TO SCALER

R-PR-ADC G-Y-ADC B-PB-ADC
FE10 FE11 FE12 FE13
R_PR+ R_PR- G_Y+ G_Y- B_PB+ B_PB-
SOG

FOR CINCH ONLY
+3V3SW 5E03 2E31 100n
7E03 74HC4053D VDD MDX G4 4X1 4X2 VEE VSS
4E10 RES
4E11 RES

B3 SYNC INTERFACE
Hsync_SDTV 3E31 100R IE09
FBL_HSYNC_PIN16_IN 3E32 100R IE10
Vsync_SDTV 3E33 100R IE11
VSYNC_IN 3E34 100R IE12
BZX384-C2V7 6E00 6E01 6E02 6E03

FROM SCART-IO/ CINCH-IO
B15B / B23 (SCART) (CINCH)

+3V3SW I_PC_HD_SEL 2E32 100n
7E04-1 74LVC14APW
7E04-2 74LVC14APW
7E04-3 74LVC14APW
7E04-4 74LVC14APW
7E04-5 74LVC14APW
7E04-6 74LVC14APW
3E35 100R IE27 AHSYNC
IE42 3E36 100R IE24 AVSYNC
3E43 100R 3E46 100R II_PC_HD_SEL
PC_HD_SEL

B18 FROM ADC
COL_Di(9) 3E37 22R
7E05-1 74LVC14APW
7E05-2 74LVC14APW
7E05-3 74LVC14APW
7E05-4 74LVC14APW
7E05-5 74LVC14APW
7E05-6 74LVC14APW
2E36 100n
IE43 COL_Di(9)_INV
IE44 COL_Do(8)
3E49 22R
IE28 COL_Do(8)_INV
B19

G_16210_013.eps
160106

3139 123 6117.2

2E00 C3 2E01 C3 2E02 C3 2E03 B5 2E04 B7 2E05 B7 2E06 B7 2E07 C7 2E08 C8 2E09 D7 2E10 C8 2E11 D7 2E12 D8 2E13 D7 2E14 D8 2E15 A11 2E16 B9 2E17 B9 2E18 B9 2E19 B9 2E20 B9 2E21 B10 2E22 B10 2E23 B10 2E24 C11 2E25 C11 2E26 C11 2E27 C11 2E28 D11 2E29 D11 2E30 D11 2E31 E4 2E32 E7 2E33 C2 2E34 C2 2E35 D2 2E36 E11 3E00 A10 3E01 A10 3E02 A10 3E06 C4 3E07 C4 3E08 C4 3E09 D4 3E10 D4 3E11 D4 3E12 C5 3E13 B6 3E14 B6 3E15 B6 3E16 B7 3E17 B7 3E18 B7 3E19 C7 3E20 C7 3E21 D7 3E22 D7 3E23 D8 3E24 C10 3E25 C10 3E26 C10 3E27 C10 3E28 D10 3E29 D10 3E30 D10 3E31 F2 3E32 F2 3E33 F2 3E34 F2 3E35 F5 3E36 F5 3E37 G9 3E38 F7 3E39 F7 3E40 C10 3E41 D10 3E42 D10 3E43 G5 3E46 G7 3E49 G10 3E50 C3 3E51 C3 3E52 C4 3E53 D3 3E54 D3 3E55 D4 3E57 D7 3E58 D9 3E59 D9 3E60 D9 4E03 B7 4E10 E3 4E11 G4 5E00 B5 5E01 B8 5E02 A10 5E03 E4 6E00 F3 6E01 F3 6E02 G3 6E03 G3

7E00 C5 7E01 B9 7E02 A11 7E03 E4 7E04-1 E6 7E04-2 E7 7E04-3 F6 7E04-4 F7 7E04-5 G6 7E04-6 G7 7E05-1 E10 7E05-2 E11 7E05-3 F10 7E05-4 F11 7E05-5 G9 7E05-6 G11 FE00 B2 FE01 B2 FE02 B2 FE03 C6 FE04 C8 FE05 D8 FE06 B9 FE07 E9 FE08 B11 FE10 C10 FE11 C10 FE12 C10 FE13 D10 IE00 B5 IE01 B8 IE02 B8 IE03 D7 IE04 D8 IE05 B10 IE06 B10 IE07 B10 IE08 A11 IE09 F3 IE10 F3 IE11 F3 IE12 F3 IE13 C3 IE14 C3 IE15 C3 IE16 C3 IE17 A10 IE18 D3 IE19 C6 IE20 C8 IE21 D6 IE22 C8 IE23 D8 IE24 F7 IE25 C7 IE26 C7 IE27 F7 IE28 G11 IE29 A10 IE30 A10 IE32 C11 IE33 C11 IE34 C11 IE35 B8 IE36 B8 IE37 B8 IE38 C6 IE39 D7 IE40 F7 IE42 F5 IE43 G10 IE44 G10 IE45 C4 IE46 C11 IE47 B7 IE48 B7 IE49 B7 IE50 C3

SSB: Digital I/O

1F01 A5 2F01 C9 2F04 D9 2F15 A8 3F02 B2 3F05 C6 3F08 C7 3F11 C8 3F14 D6 3F17 D7 3F20 D8 3F26 A7 7F02 D2 FF02 A1 FF05 A1 FF08 A1 FF11 B1 FF14 C1 FF17 C1 FF20 C1 FF23 D1 FF26 D1 IF03 A7 IF06 C6 IF10 D6 IF14 D9 IF18 D2
1F02 A1 2F02 C9 2F13 A7 2F16 A8 3F03 D2 3F06 C6 3F09 C7 3F12 C8 3F15 D7 3F18 D7 3F24 A7 3F27 A7 7F03 C8 FF03 A1 FF06 A1 FF09 B1 FF12 B1 FF15 C1 FF18 C1 FF21 D1 FF24 D1 IF01 A6 IF04 A7 IF08 C6 IF12 D6 IF16 B3 S001 A6
1F03 C1 2F03 C9 2F14 A7 3F01 B2 3F04 D2 3F07 C7 3F10 C7 3F13 D6 3F16 D7 3F19 D8 3F25 A7 7F01 B2 FF01 A1 FF04 A1 FF07 A1 FF10 B1 FF13 B1 FF16 C1 FF19 C1 FF22 D1 FF25 D1 IF02 A6 IF05 A7 IF09 C6 IF13 C9 IF17 B2 S002 B6

3139 123 6117.2

SSB: SCART Analog I/O

B15A SCART ANALOG-IO

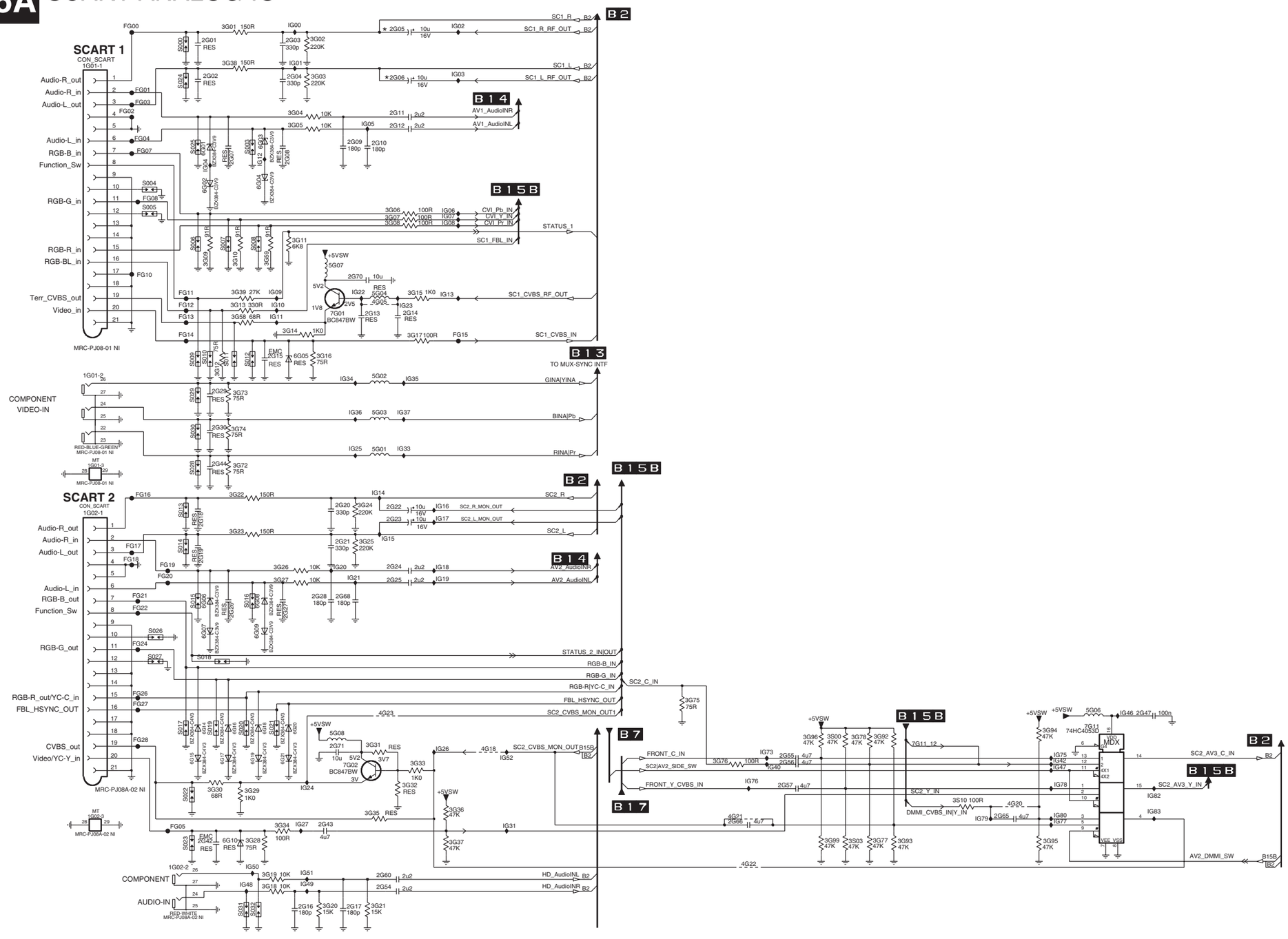

3139 123 6117.2

G_16210_015.eps
160106

1	2	3	4	5	6	7	8	9	10	11	12	13	14	15	16

1G01-1 B2	FG01 B2
1G01-2 E2	FG02 B2
1G01-3 F2	FG03 B2
1G02-1 G2	FG04 B2
1G02-2 K3	FG05 K3
1G02-3 J2	FG07 C2
2G01 A3	FG08 C2
2G02 B3	FG10 D2
2G03 A4	FG11 D3
2G04 B4	FG12 D3
2G05 A5	FG13 E3
2G06 B5	FG14 E3
2G07 C3	FG15 E6
2G08 C4	FG16 G2
2G09 B5	FG17 G2
2G10 B5	FG18 G2
2G11 B5	FG19 G3
2G12 B5	FG20 H3
2G13 D5	FG21 H2
2G14 D5	FG22 H2
2G15 E4	FG24 H2
2G16 K4	FG26 I2
2G17 K5	FG27 I2
2G18 G3	FG28 J2
2G19 G3	IG00 A4
2G20 G5	IG01 B4
2G21 G5	IG02 A6
2G22 G5	IG03 B6
2G23 G5	IG04 C3
2G24 G5	IG05 B5
2G25 H5	IG06 C6
2G26 H3	IG07 C6
2G27 H4	IG08 C6
2G28 H5	IG09 D4
2G29 E3	IG10 D4
2G30 F3	IG11 E4
2G42 K3	IG12 C4
2G43 K4	IG13 D6
2G44 F3	IG14 G5
2G47 I14	IG15 G5
2G54 K5	IG16 G6
2G55 J10	IG17 G6
2G56 J10	IG18 G6
2G57 J10	IG19 H6
2G60 K5	IG20 G5
2G65 J12	IG21 H5
2G66 J9	IG22 D5
2G68 H5	IG23 D5
2G70 D5	IG24 J4
2G71 J5	IG25 F5
3G01 A3	IG26 J6
3G02 A4	IG27 K4
3G03 B4	IG31 K7
3G04 B4	IG33 F5
3G05 B4	IG34 E5
3G06 C5	IG35 E6
3G07 C5	IG36 F5
3G08 C5	IG37 F5
3G09 D3	IG40 J10
3G10 D3	IG42 J13
3G11 D4	IG46 I14
3G12 E3	IG47 J13
3G13 D3	IG48 K4
3G14 E4	IG49 K4
3G15 D5	IG50 K4
3G16 E4	IG51 K4
3G17 E5	IG52 J7
3G18 K4	IG73 J10
3G19 K4	IG75 J13
3G20 K4	IG76 J9
3G21 K5	IG77 J13
3G22 G3	IG78 J13
3G23 G3	IG79 J12
3G24 G5	IG80 J13
3G25 G5	IG82 J14
3G26 G4	IG83 J14
3G27 H4	S000 A3
3G28 K4	S003 C4
3G29 J4	S004 C2
3G30 J3	S005 C2
3G31 J5	S006 D3
3G32 J5	S007 D3
3G33 J5	S008 D4
3G34 K4	S009 E3
3G35 J5	S010 E3
3G36 J6	S011 E3
3G37 K6	S012 E4
3G38 B3	S013 G3
3G39 D3	S014 G3
3G58 E3	S015 H3
3G59 D4	S016 H4
3G72 F3	S017 I3
3G73 E3	S018 I3
3G74 F3	S019 I3
3G75 I9	S020 I4
3G76 J9	S021 I4
3G77 K11	S022 J3
3G78 I11	S023 K3
3G92 I11	S024 B3
3G93 K11	S025 C3
3G94 I13	S026 H2
3G95 K13	S027 I2
3G96 I10	S028 F3
3G99 K11	S029 F3
3S00 I10	S030 F3
3S03 K11	S031 L4
3S10 J12	S032 L4
4G05 D5	
4G18 J6	
4G20 J13	
4G21 J9	
4G22 K9	
4G23 I5	
5G01 F5	
5G02 E5	
5G03 F5	
5G04 D5	
5G06 I14	
5G07 D5	
5G08 I5	
6G01 C3	
6G02 C3	
6G03 B4	
6G04 C4	
6G05 E4	
6G06 H3	
6G07 H3	
6G08 H4	
6G09 H4	
6G10 K3	
6G14 I3	
6G15 J3	
6G16 I3	
6G17 J3	
6G18 I4	
6G19 J4	
6G20 I4	
6G21 J4	
7G01 D5	
7G02 J5	
7G11 I14	
FG00 A2	

SSB: DMMI

B15B DMMI

DMMI CONNECTOR (TO BE USED IN DVB SETS)

Provision for non-DVB set

FOR DVB

AF732L-N2G1A

G_16210_016.eps
160106

1G03 C6 3S34 G4
2G31 D3 3S35 E4
2G32 F10 3S36 F4
2G34 A5 4G04 F8
2G35 A5 4G07 D5
2G36 B4 4G08 D5
2G37 B4 4G09 D5
2G38 B8 4G14 A4
2G39 A8 4G15 B4
2G40 A8 4G16 B9
2G41 B8 4G17 A9
2G45 D6 4G19 D5
2G46 E7 4G24 E8
2G48 F5 4G25 E8
2G49 G5 4G26 E8
2G50 F9 4G27 E8
2G51 F9 4G28 D9
2G52 D4 4G29 G3
2G53 D5 4G30 G4
2G58 E5 4G31 F12
2G61 F10 5G05 A4
2G62 C3 6G11 E10
2G63 C3 6G13 G9
2G67 E8 7G04 F6
2G69 E6 7G05 G6
2G72 F4 7G06 E7
3G40 F5 7G07 E5
3G41 G5 7G08 E11
3G42 F5 7G09 A7
3G43 F5 7G10 F9
3G44 F6 7G12 F2
3G45 G6 7G13 G4
3G46 G6 FG32 C7
3G47 G6 FG33 C7
3G48 F7 FG34 C7
3G49 G6 FG35 C5
3G50 F7 FG36 C5
3G51 G6 FG37 D5
3G52 F9 FG38 D7
3G53 F10 FG39 D7
3G54 F10 FG40 D6
3G55 G10 FG41 D7
3G56 F11 FG42 D5
3G57 G10 FG43 D7
3G60 A5 FG44 D7
3G61 A5 FG45 D7
3G62 A5 FG47 E7
3G63 A4 FG48 E7
3G64 B4 FG49 E7
3G65 B5 FG51 E7
3G66 B5 FG53 E7
3G67 A7 FG54 E7
3G68 A8 FG56 E7
3G69 A8 IG28 A5
3G70 F10 IG29 A6
3G71 B8 IG30 B9
3G79 G10 IG32 G10
3G80 F9 IG38 F5
3G81 D5 IG39 F6
3G82 D5 IG41 F6
3G83 C5 IG43 G5
3G84 C5 IG44 G5
3G85 B8 IG45 G6
3G86 B8 IG53 A7
3G87 B8 IG54 A9
3G88 D8 IG55 B9
3G89 B7 IG56 B7
3G90 D8 IG57 E10
3G91 D8 IG58 E10
3G97 C5 IG59 D8
3G98 C5 IG60 A6
3S01 A8 IG61 D8
3S02 A8 IG62 D8
3S04 D8 IG63 D9
3S05 D8 IG64 D8
3S06 D8 IG65 E10
3S07 D8 IG66 E10
3S08 E8 IG67 F11
3S09 F11 IG68 F9
3S11 E3 IG69 B7
3S12 E4 IG70 G7
3S13 E4 IG71 F9
3S14 E4 IG72 F10
3S15 E3 IG74 F11
3S16 F3
3S17 F4
3S18 F4
3S19 F4
3S20 F3
3S21 D4
3S22 D4
3S23 D8
3S24 D7
3S25 D7
3S26 D7
3S28 D8
3S29 D8
3S30 E10
3S31 F3
3S32 F2
3S33 G4

SSB: Top Connectors

B16 TOP CONNECTORS

FOR LARGE SCREEN 37"-50"

(1M03) 1J00 — UFD CONTROL
IJ01 POR (NC)
IJ02 LAMP_ON_OFF_1
IJ03
IJ04
TEMP_SENSOR (NC)
IJ05 STANDBY_1
IJ06 NC
IJ07 POWER_UP_OK_1

FROM SCALER INTERFACE B6
FROM SCALER B8
FROM SCALER B7

5J05 RES — FJ32 — FAN_SPEED
PROTECT_AUD
3J06 RES — POWER_UP_OK — IJ12
4J02 RES, 2J16 RES, 2J33 RES, 2J20 RES, 2J34 RES

PROTECT_AUD → FROM AUDIO B5

AUDIO-L, AUDIO-R
FJ28 5J01 FJ10 FJ11
FJ29 5J02 FJ12
AUDIO-SW (NC)
3V3 SOUND_ENABLE_1 FJ13
3V3 POR_AUDIO FJ14
2J26 100p, 2J27 100p, 2J28 100p, 2J29 100p, 2J36 1n0

(1M52) 1J04 B9B-PH-K-S(LF) — TO/FROM 1002 OF CLASS-D AUDIO AMPLIFIER C

(1M46) 1J01 — UFD SUPPLY
FJ00, FJ33, FJ01 (NC), FJ02, 5V(NC), FJ03, FJ04 1J08 +5V_UFD, +33V_TUN(NC), FJ05 NC, 4J01, 4J03 RES FJ39
1n0 2J31, 1J07 3A T
5J04 FJ31 +5V

TO DC-DC CONVERTER B6

1J02 — TO/FROM PSU (SUPPLY FOR LCD) 26"-32"
FJ34 VP, GND_AUDIO, FJ06, FJ38, FJ35, FJ36, FJ37, FJ40 FJ07, IJ08, IJ09, IJ10, IJ11
B12P-PH-K-S(LF)
3V2 +3V3STBY
+12V_UFD
11V6 +12VSW
5J03 POWER_DOWN
3J05 68R IJ14 STANDBY 3V1
3J03 68R IJ15 BACKLIGHT_CTRL
3J04 68R IJ13 LAMP_ON_OFF 3V2
2J30 1n0, 2J02 1n0, 2J35 1n0, 2J18 100p, 2J19 100p, 2J17 1n0, 2J22 100p, 2J23 100p, 2J21 100p

FROM SCALER INTERFACE B9
FROM SCALER B8

1J03 B3B-PH-K-S(LF) — TO/FROM 1003 OF CLASS-D AUDIO AMP (+18V / +24V) C
FJ08 VP, FJ09 GND_AUDIO
2J03 1n0 GND_AUDIO

RESERVED

FROM PACIFIC3 B20

1J05 — AMBIENT LIGHT (TOP)
B_LT_PWM, G_LT_PWM, R_LT_PWM
B_RT_PWM, G_RT_PWM, R_RT_PWM
FJ15, FJ16, FJ17, FJ18, FJ19, FJ20, FJ27
B7B-PH-K-S(LF)
100p 2J04, 100p 2J05, 100p 2J06, 100p 2J07, 100p 2J08, 100p 2J09

1J06 — AMBIENT LIGHT (BOTTOM)
B_LB_PWM, G_LB_PWM, R_LB_PWM
B_RB_PWM, G_RB_PWM, R_RB_PWM
FJ21, FJ22, FJ23, FJ24, FJ25, FJ26, FJ30
B7B-PH-K-S(LF)
100p 2J10, 100p 2J11, 100p 2J12, 100p 2J13, 100p 2J14, 100p 2J15

3139 123 6117.2

G_16210_017.eps
160106

1J00	A1	FJ23	E7
1J01	C1	FJ24	E7
1J02	D1	FJ25	E7
1J03	F1	FJ26	E7
1J04	B8	FJ27	D8
1J05	D8	FJ28	B6
1J06	E8	FJ29	B6
1J07	D2	FJ30	E8
1J08	C2	FJ31	C3
2J02	F2	FJ32	B3
2J03	F2	FJ33	C1
2J04	D6	FJ34	D1
2J05	D7	FJ35	E1
2J06	D7	FJ36	E1
2J07	D7	FJ37	E1
2J08	D7	FJ38	E1
2J09	D7	FJ39	D1
2J10	F6	FJ40	E1
2J11	F7	IJ01	B1
2J12	F7	IJ02	B1
2J13	F7	IJ03	B1
2J14	F7	IJ04	B1
2J15	F7	IJ05	B1
2J16	C2	IJ06	B1
2J17	F3	IJ07	B1
2J18	F2	IJ08	E2
2J19	F3	IJ09	E2
2J20	C3	IJ10	E2
2J21	F3	IJ11	E2
2J22	F3	IJ12	B4
2J23	F3	IJ13	E3
2J26	C6	IJ14	E3
2J27	C7	IJ15	E3
2J28	C7		
2J29	C7		
2J30	F2		
2J31	D2		
2J33	C2		
2J34	C3		
2J35	F2		
2J36	C7		
3J03	E3		
3J04	E3		
3J05	E3		
3J06	B3		
4J01	D2		
4J02	B2		
4J03	D2		
5J01	B7		
5J02	B7		
5J03	E2		
5J04	C2		
5J05	B3		
FJ00	C1		
FJ01	C1		
FJ02	C1		
FJ03	C1		
FJ04	C1		
FJ05	D1		
FJ06	E1		
FJ07	E2		
FJ08	F1		
FJ09	F2		
FJ10	B7		
FJ11	B7		
FJ12	B7		
FJ13	B7		
FJ14	B7		
FJ15	D7		
FJ16	D7		
FJ17	D7		
FJ18	D7		
FJ19	D7		
FJ20	D7		
FJ21	E7		
FJ22	E7		

SSB: Side Connectors

1K00 A10 1K04 C1 2K02 B3 2K05 B3 2K08 C4 2K12 C4 2K15 E3 2K18 C10 2K21 B8 2K24 B8 2K27 B9 3K01 B3 3K05 C3 3K08 D3 3K12 B8 4K02 E2 4K05 A9 5K00 A8 FK00 C1 FK03 D1 FK06 D1 FK09 C10 IK00 A10 IK03 B10 IK16 A9
1K01 C1 2K00 B9 2K03 B3 2K06 C3 2K10 D3 2K13 D3 2K16 E3 2K19 C3 2K22 B8 2K25 B9 2K28 B9 3K02 C3 3K06 D4 3K09 E3 3K13 B8 4K03 A9 4K06 A10 5K01 C3 FK01 C1 FK04 D1 FK07 D1 FK10 D1 IK01 A10 IK04 B3 IK17 C3
1K02 C10 2K01 B8 2K04 B3 2K07 C3 2K11 D3 2K14 D3 2K17 E3 2K20 C3 2K23 B8 2K26 B9 3K00 B3 3K03 C4 3K07 D3 3K11 A8 4K01 A9 4K04 A9 4K07 A9 5K02 A8 FK02 D1 FK05 D1 FK08 C10 FK11 B10 IK02 A10 IK05 A10 IK18 D3

1 2 3 4 5 6 7 8 9 10

B17 SIDE CONNECTORS

B17

B15A/B23

FRONT_Y_CVBS_IN
FRONT_C_IN
SIDE_AudioINL
SIDE_AudioINR
HP_LOUT
HP_DET_R_DC
HP_ROUT

3K00 100R 2K02 10p 2K03 10p IK04
3K01 100R 2K04 10p 2K05 10p
3K02 10K 2K06 100p 2K07 100p 3K03 15K IK17 2K08 2u2
5K01 1u0 2K19 1n0 2K20 1n0 +5VSW
3K05 10K 2K10 100p 2K11 100p 3K06 15K IK18 2K12 2u2
3K07 39R 2K13 100p 2K14 100p
3K08 68R 2K15 100p
3K09 39R * 2K16 100p * 2K17 100p

FOR LARGE SCREEN 37"-50"
4K02

FOR LARGE SCREEN 37"-50"
TO/FROM 1304 OF SIDE I/O 1K01 (1M36) D
1K04
FK00 FRONT_Y_CVBS_IN_1
FK01 FRONT_C_IN_1
FK02 SIDE_AudioINL-1
FK03 +5VSW_1 3V3
FK04 SIDE_AudioINR-1
FK10
FK05 HP_LOUT_1
FK06 HP_DET_R_DC_1 3V3
FK07 HP_ROUT_1

B15B/B23

B3 B6 B2 B5

+3V3STBY
LED_SEL
RC_OUT
LS|PDP_DVB_SEMISTANDBY
PC-TV-LED
KEYBOARD

+3V3STBY_1 +5V
IK16
3K11 68R 4K01 RES 4K04 IK00 PC-TV-LED_1
5K00 1u0 4K03 RES 4K07 IK05 +3V3STBY_1_+5V
5K02 1u0 4K06 4K05 IK01 LED_SEL_1
3K12 68R IK02 IR_1
3K13 RES IK03 LIGHT_SENSOR_1
2K01 1n0 2K21 100p 2K22 100p 2K23 100p 2K24 RES
2K00 1n0 2K25 100p 2K26 100p 2K27 100p 2K28 RES

J TO/FROM 1540 OF IR/ LED 1K00 (1M20) B6B-PH-K
FK11

E TOP/SIDE KEYBOARD 1K02 (1M01) B3B-PH-K-S(LF)
FK08 FK09
2K18 100p

3139 123 6117.2

G_16210_018.eps 160106

SSB: ADC

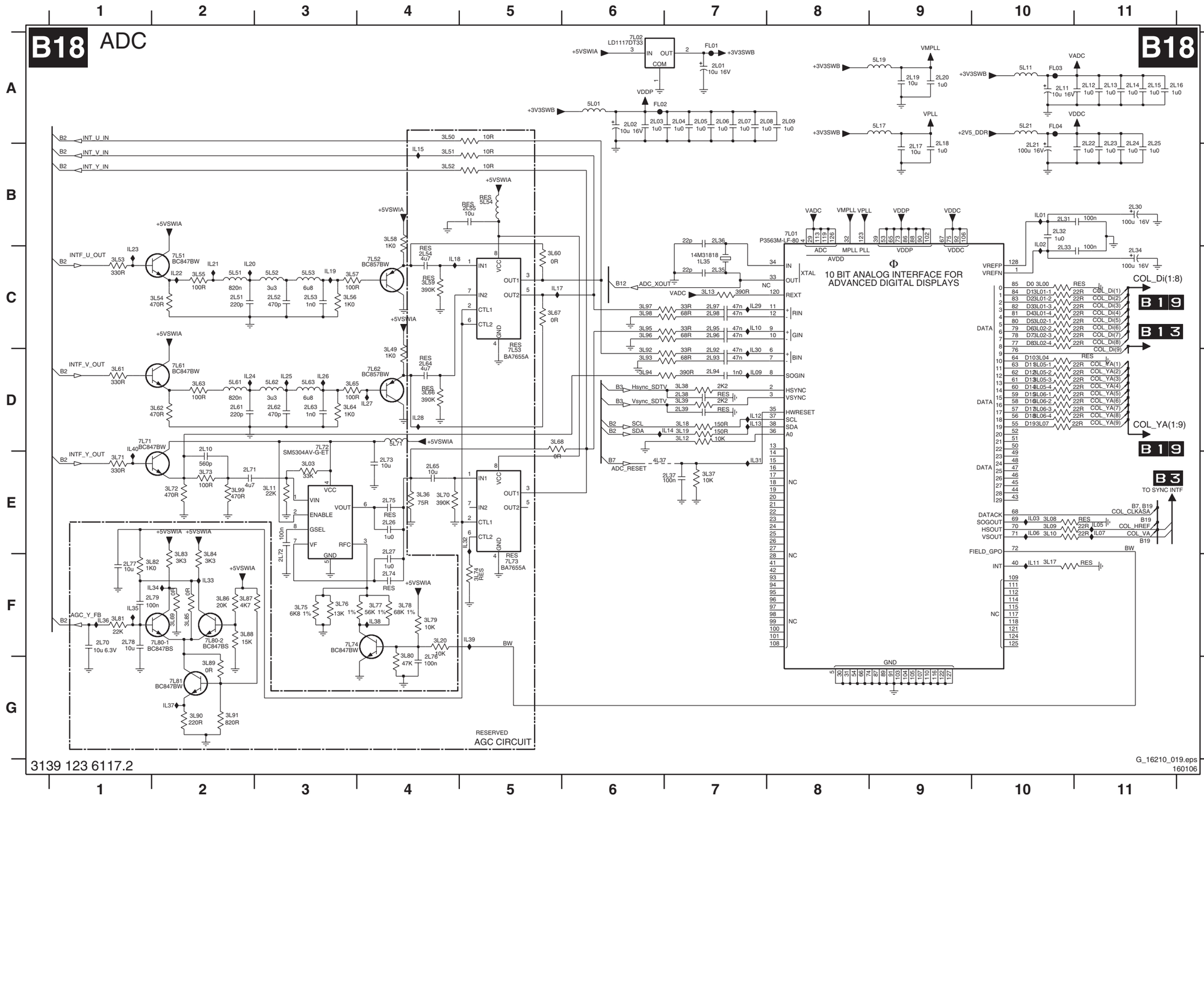

1L35 C7	3L10 E10	7L74 F4
2L01 A7	3L11 E3	7L80-1 F1
2L02 A6	3L12 D7	7L80-2 F2
2L03 A6	3L13 C7	7L81 G2
2L04 A7	3L17 F10	FL01 A7
2L05 A7	3L18 D7	FL02 A6
2L06 A7	3L19 D7	FL03 A10
2L07 A7	3L20 F4	FL04 A10
2L08 A7	3L36 E4	IL01 B10
2L09 A8	3L37 E7	IL02 B10
2L10 D2	3L38 D7	IL03 E10
2L11 A10	3L39 D7	IL05 E11
2L12 A11	3L49 C4	IL06 E10
2L13 A11	3L50 A4	IL07 E11
2L14 A11	3L51 B4	IL09 D7
2L15 A11	3L52 B4	IL10 C7
2L16 A11	3L53 C1	IL11 F10
2L17 B9	3L54 C2	IL12 D7
2L18 A9	3L55 C2	IL13 D7
2L19 A9	3L56 C3	IL14 D7
2L20 A9	3L57 C3	IL15 B4
2L21 A10	3L58 B4	IL17 C5
2L22 A11	3L59 C4	IL18 C4
2L23 A11	3L60 C5	IL19 C3
2L24 A11	3L61 D1	IL20 C2
2L25 A11	3L62 D2	IL21 C2
2L26 E4	3L63 D2	IL22 C2
2L27 E4	3L64 D3	IL23 C1
2L30 B11	3L65 D3	IL24 D2
2L31 B10	3L66 D4	IL25 D3
2L32 B10	3L67 C5	IL26 D3
2L33 C10	3L68 D5	IL27 D4
2L34 C11	3L69 F2	IL28 D4
2L35 C7	3L70 E4	IL29 C7
2L36 B7	3L71 E1	IL30 D7
2L37 E7	3L72 E2	IL31 E7
2L38 D7	3L73 E2	IL32 E5
2L39 D7	3L74 F5	IL33 F2
2L51 C2	3L75 F3	IL34 F2
2L52 C3	3L76 F3	IL35 F1
2L53 C3	3L77 F4	IL36 F1
2L54 C4	3L78 F4	IL37 G2
2L55 B5	3L79 F4	IL38 F4
2L61 D2	3L80 F4	IL39 F5
2L62 D3	3L81 F1	IL40 D1
2L63 D3	3L82 F2	
2L64 D4	3L83 E2	
2L65 E4	3L84 E2	
2L70 F1	3L85 F2	
2L71 E2	3L86 F2	
2L72 F3	3L87 F2	
2L73 E4	3L88 F2	
2L74 F4	3L89 G2	
2L75 E4	3L90 G2	
2L76 F4	3L91 G2	
2L77 F1	3L92 D6	
2L78 F1	3L93 D6	
2L79 F2	3L94 D6	
2L92 D7	3L95 C6	
2L93 D7	3L96 C6	
2L94 D7	3L97 C6	
2L95 C7	3L98 C6	
2L96 C7	3L99 E2	
2L97 C7	4L37 E6	
2L98 C7	5L01 A6	
3L00 C10	5L11 A10	
3L01-1 C10	5L17 A9	
3L01-2 C10	5L19 A9	
3L01-3 C10	5L21 A10	
3L01-4 C10	5L51 C2	
3L02-1 C10	5L52 C3	
3L02-2 C10	5L53 C3	
3L02-3 C10	5L54 B5	
3L02-4 C10	5L61 D2	
3L03 E3	5L62 D3	
3L04 D10	5L63 D3	
3L05-1 D10	5L71 D4	
3L05-2 D10	7L01 B8	
3L05-3 D10	7L02 A6	
3L05-4 D10	7L51 C2	
3L06-1 D10	7L52 C4	
3L06-2 D10	7L53 D5	
3L06-3 D10	7L61 D2	
3L06-4 D10	7L62 D4	
3L07 D10	7L71 D1	
3L08 E10	7L72 D3	
3L09 E10	7L73 F5	

SSB: Columbus

B19 COLUMBUS

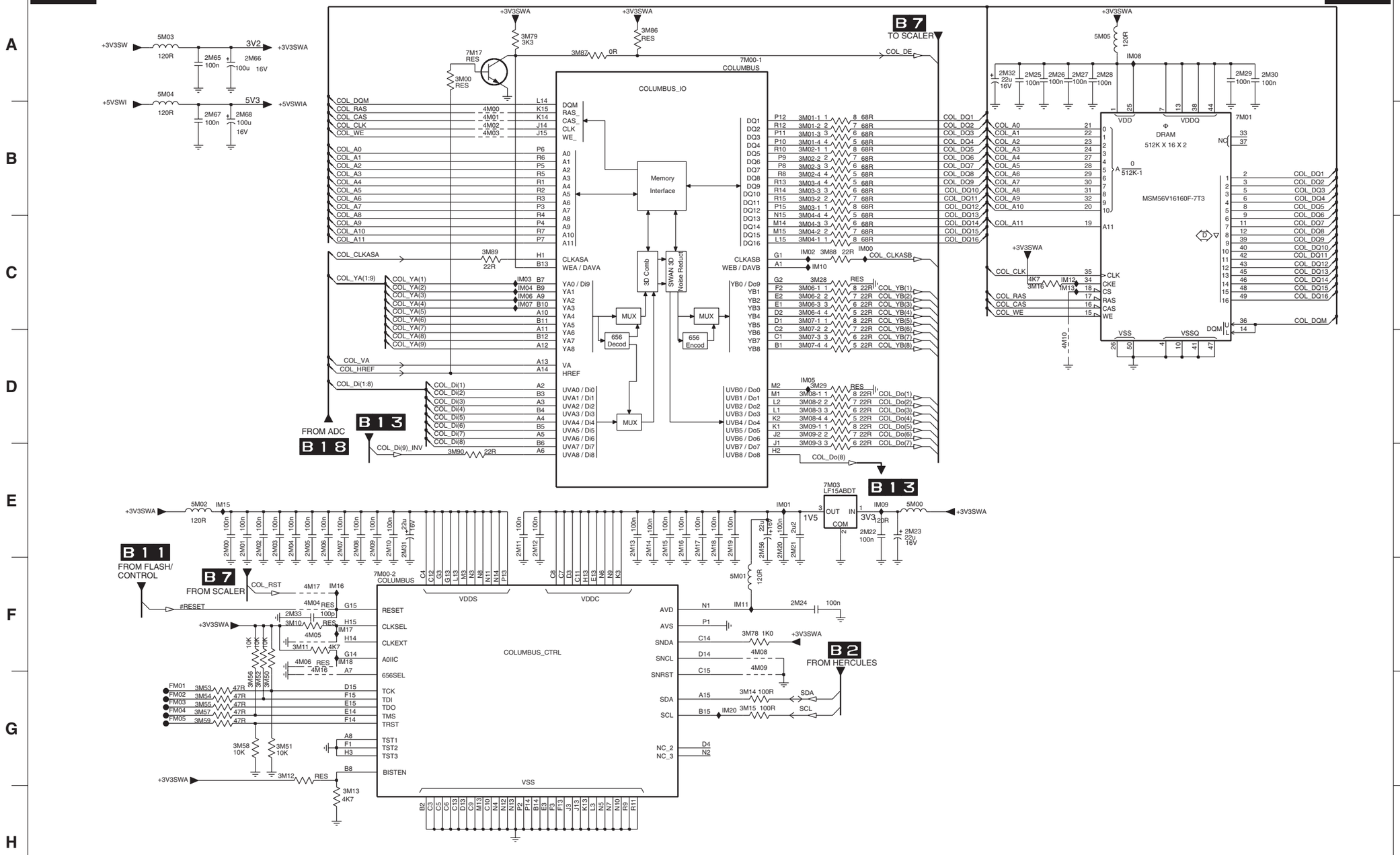

3139 123 6117.2

G_16210_020.eps
160106

2M00 E2	4M04 F3
2M01 E2	4M05 F3
2M02 E3	4M06 F3
2M03 E3	4M08 F7
2M04 E3	4M09 F7
2M05 E3	4M10 D10
2M06 E3	4M16 F3
2M07 E3	4M17 F3
2M08 E3	5M00 E8
2M09 E4	5M01 F7
2M10 E4	5M02 E2
2M11 E5	5M03 A2
2M12 E5	5M04 A2
2M13 E6	5M05 A10
2M14 E6	7M00-1 A7
2M15 E6	7M00-2 F4
2M16 E6	7M01 B11
2M17 E6	7M03 E8
2M18 E7	7M17 A4
2M19 E7	FM01 G2
2M20 E7	FM02 G2
2M21 E7	FM03 G2
2M22 E8	FM04 G2
2M23 E8	FM05 G2
2M24 F7	IM00 C8
2M25 A9	IM01 E7
2M26 A10	IM02 C7
2M27 A10	IM03 C5
2M28 A10	IM04 C5
2M29 A11	IM05 D7
2M30 A11	IM06 C5
2M31 E4	IM07 C5
2M32 A9	IM08 A10
2M33 F3	IM09 E8
2M56 E7	IM10 C7
2M65 A2	IM11 F7
2M66 A2	IM12 C10
2M67 B2	IM13 C10
2M68 B2	IM15 E2
3M00 A4	IM16 F3
3M01-1 B7	IM17 F3
3M01-2 B7	IM18 F3
3M01-3 B7	IM20 G7
3M01-4 B7	
3M02-1 B7	
3M02-2 B7	
3M02-3 B7	
3M02-4 B7	
3M03-1 B7	
3M03-2 B7	
3M03-3 B7	
3M03-4 B7	
3M04-1 C7	
3M04-2 C7	
3M04-3 C7	
3M04-4 C7	
3M06-1 C7	
3M06-2 C7	
3M06-3 C7	
3M06-4 C7	
3M07-1 C7	
3M07-2 D7	
3M07-3 D7	
3M07-4 D7	
3M08-1 D7	
3M08-2 D7	
3M08-3 D7	
3M08-4 D7	
3M09-1 D7	
3M09-2 D7	
3M09-3 E7	
3M10 F3	
3M11 F3	
3M12 G3	
3M13 H3	
3M14 G7	
3M15 G7	
3M16 C9	
3M28 C7	
3M29 D7	
3M50 G3	
3M51 G3	
3M52 G3	
3M53 G2	
3M54 G2	
3M55 G2	
3M56 G2	
3M57 G2	
3M58 G2	
3M59 G2	
3M78 F7	
3M79 A5	
3M86 A6	
3M87 A5	
3M88 C8	
3M89 C5	
3M90 E4	
4M00 B5	
4M01 B5	
4M02 B5	
4M03 B5	

SSB: Pacific 3

B20 PACIFIC 3

B20

LVDS CONNECTOR MATRIX

LCD 26" & 32"

LCD 37" & 42" PDP 42" & 50"

TO PLASMA PANEL (TIMING CONTROL)

TO LCD PANEL (TIMING CONTROL)

FROM SCALER INTERFACE

FROM SCALER

FROM HERCULES

FROM DC-DC CONVERTER

FOR LCD ONLY

DEBUGGER CONNECTION

FOR DEBUGGING

FOR PACIFIC3 PROGRAMMING

RESET

FROM SCALER INTERFACE

RESET BUTTON

FOR OTC ONLY

SUPPLY

LVDS

MISC

GPIO

FI-WE31P-HFE-E1500

FI-TWE31P-VF-E1400

M25P05-AVMN6

B10B-PH-SM3-TBT

BM03B-SRSS-TBT

3139 123 6117.2

G_16210_021.eps
160106

1N02 A11	4N01 A3
1N03 H12	4N02 A3
1N04 G12	4N03 A3
1N05 J13	4N04 A3
1N11 D6	4N05 B3
1N12 E6	4N06 B3
1N13 F6	4N07 B3
1N14 F6	4N08 B3
1N15 G6	4N09 B3
1N16 A10	4N10 B3
1N17 D10	4N11 B12
1N18 D11	4N12 C12
1N19 G9	4N13 C12
1N20 J14	4N20 D8
2N01 J1	4N21 E8
2N02 J1	4N22 F8
2N03 J1	4N23 F8
2N04 J1	4N24 F8
2N05 J1	4N25 F8
2N06 J1	4N26 F8
2N07 J1	4N27 F8
2N08 J2	4N28 F9
2N09 J2	4N29 F9
2N10 J2	4N30 J12
2N11 J2	4N31 J12
2N12 J2	4N34 H10
2N13 J2	4N35 H10
2N14 J2	4N36 F9
2N15 J3	4N37 F10
2N16 J3	4N38 F8
2N17 I2	5N03 H5
2N19 I2	5N04 H2
2N20 I3	5N05 H6
2N21 I3	5N06 H6
2N22 I3	5N07 I10
2N23 I3	5N10 B2
2N24 I3	5N11 B4
2N25 I4	5N12 B3
2N26 I5	5N72 E13
2N27 I5	6N19 C11
2N28 H6	7N00-1 C3
2N29 H7	7N00-2 A13
2N30 H7	7N00-3 J8
2N31 I6	7N02 F13
2N32 I7	7N03 H4
2N33 I7	7N04 H2
2N35 I7	7N05 G9
2N36 I7	7N01 B2
2N37 I8	FN02 C3
2N38 I8	FN03 B3
2N39 I8	FN09 I4
2N40 I8	FN10 H5
2N41 I8	FN11 H7
2N42 I8	FN12 H7
2N43 I8	FN13 B12
2N44 I9	FN15 B12
2N45 I9	FN16 B12
2N46 I9	FN17 B12
2N47 I9	FN18 B12
2N48 I9	FN19 B12
2N49 I9	FN20 C12
2N50 I9	FN24 C12
2N51 I10	FN25 C12
2N54 C2	FN32 D10
2N55 C2	FN33 D10
2N56 C3	FN34 F10
2N57 C3	FN35 F12
2N58 C3	FN36 F12
2N59 C3	FN38 G12
2N60 C3	FN39 G12
2N61 C3	FN40 G12
2N62 C4	FN41 H12
2N63 C4	FN42 H12
2N64 C4	FN43 H12
2N65 C4	FN44 H12
2N66 C4	FN46 G10
2N67 C4	FN47 H10
2N68 I13	FN48 H10
2N69 B14	FN49 H10
2N75 E13	FN50 H10
2N76 E13	FN51 H10
2N80 E7	FN52 H10
2N81 E7	FN53 H10
2N82 E7	FN54 H10
2N83 E7	FN55 H10
2N84 F7	FN56 A12
2N85 F7	FN57 A12
2N86 F7	FN58 E13
2N87 F7	FN59 I9
2N88 G7	IN01 H2
2N89 G7	IN02 H5
2N90 G8	IN03 E10
3N01 E1	IN04 E10
3N02 E1	IN05 F9
3N03 F1	IN06 F9
3N04 F1	IN07 F9
3N05 F1	IN08 F9
3N10 A12	IN09 C12
3N11 A11	IN10 C11
3N12 C12	IN11 B13
3N13 B14	IN12 B13
3N14 B14	IN13 B13
3N15 B14	IN14 B13
3N16 B14	IN15 B13
3N17 B14	IN16 G13
3N19 C11	IN17 G13
3N20 G12	IN18 J12
3N21 G12	IN19 J12
3N22 H12	IN20 B13
3N23 H13	
3N26 I13	
3N27 G10	
3N28 G10	
3N29 B13	
3N30 F8	
3N31 F8	
3N71 E12	
3N72 E12	
3N73 E12	
3N80 E8	
3N81 E8	

SSB: Diversity Tables B9-B20

B09

Item Nr.		PDP 42" - 50"	LCD 26" - 32"	LCD 37" - 42"	PDP DVB 42" - 50"	PDP DVB SDI	PDP SDI	Description
2A00	319801731040	☑	☐	☐	☑	☑	☑	CER2 0603 X7R 16V 100N COL
2A01	319803401010	☑	☐	☐	☑	☑	☑	CER1 0402 NP0 50V 100P COL
2A02	319803401010	☑	☐	☐	☑	☑	☑	CER1 0402 NP0 50V 100P COL
2A12	319803521030	☑	☐	☑	☑	☑	☑	CER2 0402 X7R 16V 10N COL
2A13	319803571040	☑	☐	☑	☑	☑	☑	CER2 0402 Y5V 16V 100N COL
2A14	319803521030	☐	☐	☐	☑	☑	☐	CER2 0402 X7R 16V 10N COL
3A00	319803106890	☑	☐	☐	☑	☐	☐	RST SM 0402 68R PM5 COL
3A01	319803106890	☑	☐	☐	☑	☐	☐	RST SM 0402 68R PM5 COL
3A02	319803101020	☐	☑	☑	☐	☐	☐	RST SM 0402 1K PM5 COL
3A07	319803101030	☑	☐	☐	☑	☑	☑	RST SM 0402 10K PM5 COL
3A08	319803101030	☑	☑	☐	☑	☑	☑	RST SM 0402 10K PM5 COL
3A10	319803101030	☑	☐	☑	☑	☑	☑	RST SM 0402 10K PM5 COL
3A11	319803101030	☑	☐	☑	☑	☑	☑	RST SM 0402 10K PM5 COL
3A13	319803101030	☑	☐	☑	☑	☑	☑	RST SM 0402 10K PM5 COL
3A14	319803104720	☑	☐	☑	☑	☑	☑	RST SM 0402 4K7 PM5 COL
3A15	319803103320	☐	☐	☐	☑	☑	☐	RST SM 0402 3K3 PM5 COL
3A16	319803101030	☐	☐	☐	☑	☑	☐	RST SM 0402 10K PM5 COL
4A03	319802190030	☐	☑	☑	☐	☐	☐	RST SM 0603 JUMP. 0R05 COL
4A04	319803190010	☑	☐	☐	☑	☑	☑	RST SM 0402 JUMP. 0R05 COL
4A05	319803190010	☐	☑	☐	☐	☐	☐	RST SM 0402 JUMP. 0R05 COL
4A06	319803190010	☐	☑	☐	☐	☐	☐	RST SM 0402 JUMP. 0R05 COL
5A00	319801890060	☑	☐	☐	☑	☐	☐	FXDIND 0805 100MHZ 30R COL R
7A00	935275998118	☑	☐	☐	☑	☑	☑	IC SM PCA9515ADP (PHSE) R
7A02	319801042310	☑	☐	☑	☑	☑	☑	TRA SIG SM BC847BW (COL) R
7A03	319801042310	☑	☐	☑	☑	☑	☑	TRA SIG SM BC847BW (COL) R
7A04	319801042310	☐	☐	☐	☑	☑	☐	TRA SIG SM BC847BW (COL) R

B13

Item Nr.		EU 10pg TXT	EU 1000pg TXT	AP with TXT	AP non TXT	Description
2E04	202055200005	☑	☑	☑	☐	CER2 0603 X5R 6V3 4U7 PM10 R
	202055200027	☑	☑	☑	☐	CER2 0603 X5R 6V3 4U7 PM10 R
2E05	202055200005	☑	☑	☑	☐	CER2 0603 X5R 6V3 4U7 PM10 R
2E06	202055200005	☑	☑	☑	☐	CER2 0603 X5R 6V3 4U7 PM10 R
2E15	319803571040	☐	☐	☑	☑	CER2 0402 Y5V 16V 100N COL
2E21	202055200005	☐	☐	☑	☑	CER2 0603 X5R 6V3 4U7 PM10 R
2E22	202055200005	☐	☐	☑	☑	CER2 0603 X5R 6V3 4U7 PM10 R
2E23	202055200005	☐	☐	☑	☑	CER2 0603 X5R 6V3 4U7 PM10 R
3E00	232270570569	☐	☐	☑	☑	RST SM 0402 RC31 56R PM5 R
3E01	232270570569	☐	☐	☑	☑	RST SM 0402 RC31 56R PM5 R
3E02	232270570569	☐	☐	☑	☑	RST SM 0402 RC31 56R PM5 R
3E13	319803103310	☑	☐	☑	☐	RST SM 0402 330R PM5 COL
	319803190010	☐	☑	☐	☐	RST SM 0402 JUMP. 0R05 COL
3E14	319803103310	☑	☐	☑	☐	RST SM 0402 330R PM5 COL
	319803190010	☐	☑	☐	☐	RST SM 0402 JUMP. 0R05 COL
3E15	319803103310	☑	☐	☑	☐	RST SM 0402 330R PM5 COL
	319803190010	☐	☑	☐	☐	RST SM 0402 JUMP. 0R05 COL
3E16	319803103310	☑	☐	☑	☐	RST SM 0402 330R PM5 COL
3E17	319803103310	☑	☐	☑	☐	RST SM 0402 330R PM5 COL
3E18	319803103310	☑	☐	☑	☐	RST SM 0402 330R PM5 COL
3E32	319803101010	☐	☐	☑	☑	RST SM 0402 100R PM5 COL
3E34	319803101010	☐	☐	☑	☑	RST SM 0402 100R PM5 COL
3E46	319803101010	☐	☐	☑	☑	RST SM 0402 100R PM5 COL
	319803101090	☑	☑	☐	☐	RST SM 0402 10R PM5 COL
4E10	319803101090	☑	☑	☐	☐	RST SM 0402 10R PM5 COL
4E11	319803101090	☑	☑	☐	☐	RST SM 0402 10R PM5 COL
5E02	242254945333	☐	☐	☑	☑	IND FXD 1206 EMI 100MHZ 120R R
5E03	242254945333	☐	☐	☑	☑	IND FXD 1206 EMI 100MHZ 120R R
6E01	319802052780	☐	☐	☑	☑	DIO REG SM BZX384-C2V7 COL R
6E03	319802052780	☐	☐	☑	☑	DIO REG SM BZX384-C2V7 COL R
7E02	932219956668	☐	☐	☑	☑	IC SM ADG781BCPZ (ANA0) R
7E03	319801071090	☐	☐	☑	☑	IC SM 74HC4053D (COL) R
7E04	319801070740	☑	☑	☑	☐	IC SM 74LCX14T (COL) R
	935260739118	☐	☐	☐	☑	IC SM 74LVC14APW (PHSE) R
7E05	319801070740	☑	☑	☑	☐	IC SM 74LCX14T (COL) R
	935260739118	☐	☐	☐	☑	IC SM 74LVC14APW (PHSE) R

B15AB

Item Nr.		Non DVB	With DVB	Desciption
1G03	242202518872	☐	☑	CON H 32P F 0.50 SM FPC 0.3 R
2G31	202055200005	☐	☑	CER2 0603 X5R 6V3 4U7 PM10 R
	202055200027	☐	☑	CER2 0603 X5R 6V3 4U7 PM10 R
2G32	319801741050	☐	☑	CER2 0603 Y5V 10V 1U COL
	319803041090	☐	☑	ELCAP SM 16V 10U PM20 COL R
2G35	319803571040	☐	☑	CER2 0402 Y5V 16V 100N COL
2G36	202055200027	☐	☑	CER2 0603 X5R 6V3 4U7 PM10 R
2G37	202055200027	☐	☑	CER2 0603 X5R 6V3 4U7 PM10 R
2G38	202055200027	☐	☑	CER2 0603 X5R 6V3 4U7 PM10 R
2G39	202055200027	☐	☑	CER2 0603 X5R 6V3 4U7 PM10 R
2G40	202055200027	☐	☑	CER2 0603 X5R 6V3 4U7 PM10 R
2G41	202055200027	☐	☑	CER2 0603 X5R 6V3 4U7 PM10 R
2G45	319801731020	☐	☑	CER2 0603 X7R 50V 1N COL
	319803501020	☐	☑	CER2 0402 X7R 50V 1N COL
2G48	319801741050	☐	☑	CER2 0603 Y5V 10V 1U COL
2G49	319801741050	☐	☑	CER2 0603 Y5V 10V 1U COL
2G50	319803041090	☐	☑	ELCAP SM 16V 10U PM20 COL R
2G51	319803571040	☐	☑	CER2 0402 Y5V 16V 100N COL
2G52	202055296703	☐	☑	CER1 0402 NP0 50V 180P PM5 R
2G53	202055296703	☐	☑	CER1 0402 NP0 50V 180P PM5 R
2G62	202055200035	☐	☑	CER2 0603 X5R 6V3 2U2 PM10 R
	202055200183	☐	☑	CER2 0603 X5R 6V3 2U2 PM10 R
2G63	202055200035	☐	☑	CER2 0603 X5R 6V3 2U2 PM10 R
	202055200183	☐	☑	CER2 0603 X5R 6V3 2U2 PM10 R
2G65	202055200005	☐	☑	CER2 0603 X5R 6V3 4U7 PM10 R
	202055200027	☐	☑	CER2 0603 X5R 6V3 4U7 PM10 R
2G66	202055200005	☐	☑	CER2 0603 X5R 6V3 4U7 PM10 R
	202055200027	☐	☑	CER2 0603 X5R 6V3 4U7 PM10 R
2G72	202055200005	☐	☑	CER2 0603 X5R 6V3 4U7 PM10 R
	202055200027	☐	☑	CER2 0603 X5R 6V3 4U7 PM10 R
3G40	319803101010	☐	☑	RST SM 0402 100R PM5 COL
3G41	319803101010	☐	☑	RST SM 0402 100R PM5 COL
3G42	319803104730	☐	☑	RST SM 0402 47K PM5 COL
3G43	319803104730	☐	☑	RST SM 0402 47K PM5 COL
3G44	319803101020	☐	☑	RST SM 0402 1K PM5 COL
3G45	319803104730	☐	☑	RST SM 0402 47K PM5 COL
3G46	319803101020	☐	☑	RST SM 0402 1K PM5 COL
3G47	319803104730	☐	☑	RST SM 0402 47K PM5 COL
3G48	319803106890	☐	☑	RST SM 0402 68R PM5 COL
3G49	319803101020	☐	☑	RST SM 0402 1K PM5 COL
3G50	319803106890	☐	☑	RST SM 0402 68R PM5 COL
3G51	319803101020	☐	☑	RST SM 0402 1K PM5 COL
3G52	319803101020	☐	☑	RST SM 0402 1K PM5 COL
3G53	319803104730	☐	☑	RST SM 0402 47K PM5 COL
3G54	319803101020	☐	☑	RST SM 0402 1K PM5 COL
3G55	319803104730	☐	☑	RST SM 0402 47K PM5 COL
3G56	319803101010	☐	☑	RST SM 0402 100R PM5 COL
3G60	319803104720	☐	☑	RST SM 0402 4K7 PM5 COL
3G61	319803104730	☐	☑	RST SM 0402 47K PM5 COL
3G62	319803104730	☐	☑	RST SM 0402 47K PM5 COL
3G63	319803101010	☐	☑	RST SM 0402 100R PM5 COL
3G64	319803101010	☐	☑	RST SM 0402 100R PM5 COL
3G65	319803104730	☐	☑	RST SM 0402 47K PM5 COL
3G66	319803104730	☐	☑	RST SM 0402 47K PM5 COL
3G67	319803104730	☐	☑	RST SM 0402 47K PM5 COL
3G68	319803104730	☐	☑	RST SM 0402 47K PM5 COL
3G69	319803104730	☐	☑	RST SM 0402 47K PM5 COL
3G70	319803104730	☐	☑	RST SM 0402 47K PM5 COL
3G71	319803101010	☐	☑	RST SM 0402 100R PM5 COL
3G80	319803106890	☐	☑	RST SM 0402 68R PM5 COL
3G81	319803101020	☐	☑	RST SM 0402 1K PM5 COL
3G83	319803101030	☐	☑	RST SM 0402 10K PM5 COL
3G84	319803101030	☐	☑	RST SM 0402 10K PM5 COL
3G85	319803104730			RST SM 0402 47K PM5 COL
3G86	319803104730			RST SM 0402 47K PM5 COL
3G87	319803104730			RST SM 0402 47K PM5 COL
3G88	319803101020			RST SM 0402 1K PM5 COL
3G89	319803104730			RST SM 0402 47K PM5 COL
3G90	319803101020			RST SM 0402 1K PM5 COL
3G91	319803101020			RST SM 0402 1K PM5 COL
3G92	319803102230			RST SM 0402 22K PM5 COL

B16

Item Nr.		LCD 37" - 42	LCD 26" - 32	PDP 42" - 50	Description
1J00	242202510771	☑	☐	☑	CON V 10P M 2.00 PH B
1J01	242202510655	☑	☐	☑	CON V 11P M 2.00 PH B
1J02	242202510772	☐	☑	☐	CON V 12P M 2.00 PH B
1J03	242202510768	☐	☑	☐	CON V 3P M 2.00 PH B
1J07	242208611081	☑	☐	☑	FUSE SM T 3A 125V UL R
1J08	242254945333	☑	☐	☑	IND FXD 1206 EMI 100MHZ 120R R
2J18	319803401010	☑	☑	☐	CER1 0402 NP0 50V 100P COL
2J19	319803401010	☑	☑	☐	CER1 0402 NP0 50V 100P COL
2J22	319803401010	☑	☑	☐	CER1 0402 NP0 50V 100P COL
2J23	319803401010	☑	☑	☐	CER1 0402 NP0 50V 100P COL
2J31	319803401010	☑	☐	☑	CER1 0402 NP0 50V 100P COL
3J03	319803106890	☑	☑	☐	RST SM 0402 68R PM5 COL
3J04	319803106890	☑	☑	☐	RST SM 0402 68R PM5 COL
4J01	319803190010	☑	☐	☑	RST SM 0402 JUMP. 0R05 COL
5J04	242254945333	☑	☐	☑	IND FXD 1206 EMI 100MHZ 120R R

B17

Item Nr.		26in - 32i	37in - 50i	Description
1K01	242202510772	☑	☐	CON V 12P M 2.00 PH B
1K04	242202510655	☐	☑	CON V 11P M 2.00 PH B
2K15	319803401010	☑	☐	CER1 0402 NP0 50V 100P COL
3K08	319803106890	☑	☐	RST SM 0402 68R PM5 COL
4K02	319802190030	☐	☑	RST SM 0603 JUMP. 0R05 COL

B20 LVDS Conn.

Item Nr.		PDP LG	LCD 37" - 42	LCD 26" - 32	PDP FHP	PDP SDI	Description
1N16	242202518772	☐	☐	☑	☐	☐	CON V 30P M 1.25 SM 1453230 R
1N17	242202518427	☑	☑	☐	☑	☑	CON H 31P F 1.25 SM FI-WE R
2N90	319803571030	☐	☐	☐	☐	☑	CER2 0402 Y5V 16V 10N COL
3N30	319803101030	☐	☐	☐	☐	☑	RST SM 0402 10K PM5 COL
3N31	319803104720	☐	☐	☐	☐	☑	RST SM 0402 4K7 PM5 COL
3N80	319803101010	☑	☑	☐	☐	☐	RST SM 0402 100R PM5 COL
3N81	319803101010	☑	☑	☐	☐	☐	RST SM 0402 100R PM5 COL
4N24	319803190010	☐	☐	☐	☑	☐	RST SM 0402 JUMP. 0R05 COL
4N26	319803190010	☑	☑	☐	☐	☐	RST SM 0402 JUMP. 0R05 COL
4N36	319803190010	☐	☐	☐	☑	☐	RST SM 0402 JUMP. 0R05 COL
4N37	319803190010	☐	☐	☐	☑	☐	RST SM 0402 JUMP. 0R05 COL
7N05	319801042310	☐	☐	☐	☐	☑	TRA SIG SM BC847BW (COL) R

B20 Pac-3

Item Nr.		With Pixel Plus (Pac	Non Pixel Plus	Description
1N02	242254000017	☑	☐	R
1N03	242202518779	☑	☐	CON V 4P M 2.00 SM PH R
1N04	242202518196	☐	☐	CON V 4P M 2.00 SM PH R
	242202518779	☑	☐	CON V 4P M 2.00 SM PH R
1N05	242212802975	☑	☐	SWI TACT SM H=0.5 160G SKQR R
1N19	242202518734	☑	☐	CON V 10P M 2.00 SM PH R
2N01	319803571040	☑	☐	CER2 0402 Y5V 16V 100N COL
2N02	319803571040	☑	☐	CER2 0402 Y5V 16V 100N COL
2N03	319803571040	☑	☐	CER2 0402 Y5V 16V 100N COL
2N04	319803571040	☑	☐	CER2 0402 Y5V 16V 100N COL
2N05	319803571040	☑	☐	CER2 0402 Y5V 16V 100N COL
2N06	319803571040	☑	☐	CER2 0402 Y5V 16V 100N COL
2N07	319803571040	☑	☐	CER2 0402 Y5V 16V 100N COL
2N08	319803571040	☑	☐	CER2 0402 Y5V 16V 100N COL
2N09	319803571040	☑	☐	CER2 0402 Y5V 16V 100N COL
2N10	319803571040	☑	☐	CER2 0402 Y5V 16V 100N COL
2N11	319803571040	☑	☐	CER2 0402 Y5V 16V 100N COL
2N12	319803571040	☑	☐	CER2 0402 Y5V 16V 100N COL
2N13	319803571040	☑	☐	CER2 0402 Y5V 16V 100N COL
2N14	319803571040	☑	☐	CER2 0402 Y5V 16V 100N COL
2N15	319803571040	☑	☐	CER2 0402 Y5V 16V 100N COL
2N16	319803571040	☑	☐	CER2 0402 Y5V 16V 100N COL
2N17	319803024790	☑	☐	ELCAP SM 6V3 47U PM20 COL R
2N19	319803571040	☑	☐	CER2 0402 Y5V 16V 100N COL
2N20	319803571040	☑	☐	CER2 0402 Y5V 16V 100N COL
2N21	319803571040	☑	☐	CER2 0402 Y5V 16V 100N COL
2N22	319803571040	☑	☐	CER2 0402 Y5V 16V 100N COL
2N23	319803571040	☑	☐	CER2 0402 Y5V 16V 100N COL
2N24	319803024790	☑	☐	ELCAP SM 6V3 47U PM20 COL R
2N25	319803024790	☑	☐	ELCAP SM 6V3 47U PM20 COL R
2N26	319803571040	☑	☐	CER2 0402 Y5V 16V 100N COL
2N27	319803571040	☑	☐	CER2 0402 Y5V 16V 100N COL
2N28	202055200005	☑	☐	CER2 0603 X5R 6V3 4U7 PM10 R
	202055200027	☑	☐	CER2 0603 X5R 6V3 4U7 PM10 R
2N29	319803571040	☑	☐	CER2 0402 Y5V 16V 100N COL
2N30	319803571040	☑	☐	CER2 0402 Y5V 16V 100N COL
2N31	319803571040	☑	☐	CER2 0402 Y5V 16V 100N COL
2N32	319803571040	☑	☐	CER2 0402 Y5V 16V 100N COL
2N33	319803571040	☑	☐	CER2 0402 Y5V 16V 100N COL
2N35	319803571040	☑	☐	CER2 0402 Y5V 16V 100N COL
2N36	319803571040	☑	☐	CER2 0402 Y5V 16V 100N COL
2N37	319803571040	☑	☐	CER2 0402 Y5V 16V 100N COL
2N38	319803571040	☑	☐	CER2 0402 Y5V 16V 100N COL
2N39	319803571040	☑	☐	CER2 0402 Y5V 16V 100N COL
2N40	319803571040	☑	☐	CER2 0402 Y5V 16V 100N COL
2N41	319803571040	☑	☐	CER2 0402 Y5V 16V 100N COL
2N42	319803571040	☑	☐	CER2 0402 Y5V 16V 100N COL
2N43	319803571040	☑	☐	CER2 0402 Y5V 16V 100N COL
2N44	319803571040	☑	☐	CER2 0402 Y5V 16V 100N COL
2N45	319803571040	☑	☐	CER2 0402 Y5V 16V 100N COL
2N46	319803571040			CER2 0402 Y5V 16V 100N COL
2N47	319803571040			CER2 0402 Y5V 16V 100N COL
2N48	319803571040			CER2 0402 Y5V 16V 100N COL
2N49	319803571040			CER2 0402 Y5V 16V 100N COL
2N50	319803571040			CER2 0402 Y5V 16V 100N COL
2N51	319803024790			ELCAP SM 6V3 47U PM20 COL R
2N54	319803074780			ELCAP SM 35V 4U7 PM20 COL R

G_16210_066.eps
190106

Layout Small Signal Board (Top Side Overview)

1152 E9 1G03 E6 1N03 B1 2213 C7 2234 B8 2250 B7 2269 B9 2291 D8 2710 A5 2763 B4 2B01 D1 2E20 E3 2G22 F3 2G43 F5 2J06 A1 2J21 A7 2K04 B10 2L15 C6 2L93 C6 3215 C7 3244 C7 3278 C7 3737 B4 3813 C2 3B01 C1 3E34 E3 3F03 F1 3G29 F5 3G45 E5 3G61 E8 3G82 E6 4G15 E8 6G13 F4
1153 C9 1J00 A7 1N04 A1 2214 C8 2235 B8 2251 B7 2270 B8 2447 B7 2711 A5 2815 D4 2B02 D1 2E31 E3 2G23 F4 2G45 E6 2J07 A1 2J22 A7 2K05 C10 2L16 C7 2L96 C6 3216 C7 3245 C9 3279 C7 3753 B4 3814 C2 3B02 C1 3E35 E4 3F04 F1 3G30 F5 3G46 E5 3G62 E8 3G83 E6 4G16 E7 6G14 F4
1154 C9 1J01 A5 1N05 B3 2216 C8 2236 B8 2255 C8 2271 B7 2448 B7 2716 B5 2901 C1 2B05 C1 2E32 E4 2G29 F7 2G48 E5 2J08 A1 2J23 A7 2K06 C10 2L17 C7 2L98 C6 3217 C7 3262 C8 3280 C8 3754 B4 3815 C2 3B03 C1 3E36 E4 3G01 F6 3G31 F4 3G47 E5 3G63 E8 3G84 E6 4G17 E7 6G15 F4
1156 C9 1J02 A6 1N16 A2 2218 C7 2237 B7 2256 B8 2272 B7 2501 B8 2724 B5 2902 C1 2B17 C1 2E36 E4 2G30 F7 2G49 E5 2J09 A1 2J26 A8 2K07 C10 2L18 C7 2M27 D7 3222 B8 3263 C8 3281 C8 3801 D2 3816 D2 3D05 E1 3E37 E4 3G02 F6 3G32 F5 3G48 E5 3G64 E8 3G85 E7 4G18 F5 7206 C7
1201 C8 1J03 A8 1N17 A2 2221 B9 2238 B8 2257 C9 2274 C9 2502 B8 2725 B5 2903 D5 2B18 D1 2G01 F6 2G31 E6 2G50 E5 2J10 A4 2J27 A9 2K08 C10 2L19 B6 2M28 D7 3223 B7 3264 B8 3282 D8 3802 D2 3842 C4 3D06 D1 3E38 E4 3G03 E6 3G33 F5 3G49 E5 3G65 E8 3G86 E7 4G19 E6 7214 C8
1202 B9 1J04 A9 1N18 A2 2222 B8 2240 B7 2258 B8 2275 B8 2503 A8 2726 B4 2904 D5 2B19 C1 2G02 F6 2G32 E5 2G51 E5 2J11 A4 2J28 A8 2K19 C10 2L20 C6 2M29 E6 3224 B8 3265 C8 3285 C8 3803 C2 3A00 C3 3D11 E2 3E39 E4 3G06 F7 3G34 F5 3G50 E5 3G66 E8 3G87 E7 4G22 F5 7215 C8
1440 C7 1J05 A1 1N20 B3 2223 B7 2241 B7 2259 C8 2276 B8 2504 A9 2731 A6 2934 E5 2D02 D1 2G03 F6 2G34 E7 2G52 E6 2J12 A4 2J29 A8 2K20 C10 2L25 C7 2N17 A3 3225 B7 3266 C8 3286 C8 3804 D2 3A01 C3 3D15 D2 3E43 E4 3G07 E7 3G35 F5 3G51 E5 3G67 E7 3G89 E7 4G23 F5 7216 C8
1441 A7 1J06 A4 2203 B7 2224 B7 2242 C8 2260 B8 2277 C7 2505 B9 2736 A7 2940 E3 2D42 E1 2G04 F6 2G35 E8 2G53 E7 2J13 A4 2J30 A5 2L02 D7 2L31 C7 2N24 A3 3226 B8 3267 C8 3291 D8 3805 D2 3A07 C3 3D16 D2 3E46 E4 3G08 F7 3G36 F5 3G52 E5 3G68 E7 3G97 E6 4J01 A5 7218 C7
1442 A7 1J07 A6 2205 C8 2226 C8 2243 C8 2262 C9 2278 C7 2506 B8 2737 B6 2960 C1 2D43 D1 2G05 F6 2G36 E8 2G62 E7 2J14 A4 2J31 A5 2L06 D6 2L32 C7 2N25 B3 3227 B8 3268 C7 3292 D8 3806 C2 3A08 C3 3D17 E2 3E49 E4 3G09 F7 3G37 F5 3G53 E5 3G69 E7 3G98 E6 4J02 A7 7219 D7
1801 D4 1J08 A5 2206 C8 2228 C8 2244 B7 2263 B8 2279 C7 2507 A9 2738 A7 2A00 C3 2D44 E1 2G06 F6 2G37 E8 2G63 E6 2J15 A4 2J33 A7 2L07 D6 2L33 C7 2N68 A3 3230 B8 3270 B7 3293 D8 3807 D2 3A10 C5 3D18 E2 3E57 E3 3G10 E7 3G38 F6 3G54 E5 3G71 E7 3J03 A6 4J03 A5 7501 B8
1F01 F2 1K00 B10 2207 C8 2229 C8 2245 B7 2264 B9 2285 B9 2508 A7 2739 B7 2A01 C3 2D46 E2 2G07 F6 2G38 E7 2G71 F4 2J16 A8 2J34 A7 2L08 D6 2L35 C6 2N90 A1 3231 B8 3271 B7 3294 D8 3808 D2 3A11 C5 3D21 E2 3E58 E4 3G22 F4 3G40 E5 3G55 E5 3G73 F7 3J04 A7 4K06 B10 7502 A8
1F02 F2 1K01 C10 2208 B8 2230 B8 2246 B7 2265 C9 2286 C8 2509 B7 2753 B4 2A02 C3 2D47 D2 2G18 F4 2G39 E7 2J02 A6 2J17 A7 2J35 A6 2L11 C7 2L36 C6 3166 C9 3234 B8 3272 B9 3295 C9 3809 C2 3A13 C5 3D23 E2 3E59 E3 3G23 F4 3G41 E5 3G56 E5 3G74 F7 3J05 A7 4K07 B10 7503 A8
1F03 F1 1K02 D10 2209 B8 2231 B8 2247 C8 2266 C8 2287 C8 2611 B9 2756 B4 2A12 C5 2D50 D2 2G19 F4 2G40 E7 2J03 A8 2J18 A7 2J36 A9 2L12 C6 2L38 C7 3167 C9 3235 B8 3273 B8 3501 A8 3810 C2 3A14 C4 3E31 E4 3E60 E4 3G24 F4 3G42 E5 3G57 F4 3G79 F4 3J06 A8 4M00 E6 7504 A7
1G01 F7 1K04 C10 2210 B7 2232 C8 2248 C8 2267 C8 2288 C8 2615 A9 2757 B4 2A13 C5 2D52 E2 2G20 F4 2G41 E7 2J04 A1 2J19 A7 2K02 C10 2L13 C7 2L39 C7 3207 C9 3236 B8 3274 C8 3502 B7 3811 C2 3A15 C4 3E32 E4 3F01 F2 3G25 F4 3G43 E5 3G59 F7 3G80 E5 3K00 C10 4M01 D6 7505 A9
1G02 F4 1L35 C6 2211 C9 2233 C8 2249 C8 2268 C8 2290 D8 2618 A9 2758 B4 2A14 C4 2D54 E2 2G21 F4 2G42 F5 2J05 A1 2J20 A8 2K03 C10 2L14 C7 2L70 B7 3214 C9 3242 C7 3277 C7 3723 B5 3812 C2 3A16 C4 3E33 E3 3F02 F2 3G28 F5 3G44 E5 3G60 E7 3G81 E6 3K01 B10 4M02 D7 7506 B9

3K02 C10 4M03 D6 7711 B5
3K03 C10 4N01 B2 7752 B4
3L00 D6 4N02 B2 7801 D3
3L01 D6 4N03 B2 7901 D5
3L02 D6 4N04 B2 7A00 C4
3L03 C7 4N05 B2 7A02 C5
3L05 D6 4N06 B2 7A03 C4
3L06 D6 4N07 B2 7A04 C4
3L07 D6 4N08 B2 7B01 C2
3L09 D6 4N09 B2 7C03 C5
3L10 D6 4N10 B2 7D03 E2
3L11 C7 4N20 A2 7E03 E3
3L12 C6 4N21 A2 7E04 E4
3L13 C7 4N22 A2 7E05 E4
3L17 C6 4N23 A2 7F01 F2
3L38 C7 4N24 A1 7F02 F1
3L39 C7 4N25 A2 7G02 F5
3L93 C6 4N26 A2 7G04 E5
3L96 C6 4N27 A2 7G05 E5
3L98 C6 4N28 A1 7G06 E5
3M00D6 4N29 A1 7G09 E7
3M01D6 4N30 B3 7G10 E5
3M02D6 4N31 B3 7L01 C6
3M03D6 4N36 A1 7M00 D6
3M04D6 4N37 A2 7M01 D7
3M06E6 4N38 A1 7N00 B2
3M07E6 5155 C9 7N05 A1
3M08E6 5156 C9
3M09E6 5201 C8
3M16D7 5202 B7
3M89D6 5203 B8
3N01 B3 5204 B8
3N02 B3 5205 C8
3N03 B3 5206 B8
3N04 B3 5207 B8
3N05 B3 5208 B8
3N13 B1 5209 B8
3N14 B1 5210 B8
3N15 B1 5212 B8
3N16 B1 5213 B8
3N17 B1 5215 C7
3N20 A1 5217 C8
3N21 A1 5218 D7
3N22 B1 5431 B7
3N23 B1 5501 B8
3N26 B3 5717 B5
3N30 A1 5737 B6
3N31 A1 5752 A4
3N80 A2 5753 B4
3N81 A2 5900 D5
3S01 F7 5902 E4
3S02 E7 5904 E3
3S21 F7 5A00 C3
3S22 E6 5D00 E1
4205 B8 5D01 D1
4206 D8 5D02 E1
4216 B8 5D06 D1
4217 B8 5E03 E3
4218 B8 5G02 F7
4219 B8 5G03 F7
4507 B9 5G05 E7
4508 B9 5G08 F4
4509 B9 5J01 A8
4510 B9 5J02 A9
4511 B8 5J03 A5
4512 B8 5J04 A5
4513 B8 5J05 A7
4514 B8 5K01 C10
4616 B9 5L01 C7
4617 B9 5L11 C6
4620 B9 5L17 C7
4621 B10 5L19 B6
4900 C4 6201 C8
4A00 C4 6718 B5
4A01 C4 6735 A6
4A04 C5 6736 A6
4A05 C5 6751 B4
4A06 C5 6A01 C4
4E03 E3 6E00 E4
4E10 E4 6E01 E4
4E11 E3 6E02 E3
4G04 E5 6E03 E3
4G14 E8 6G10 F5

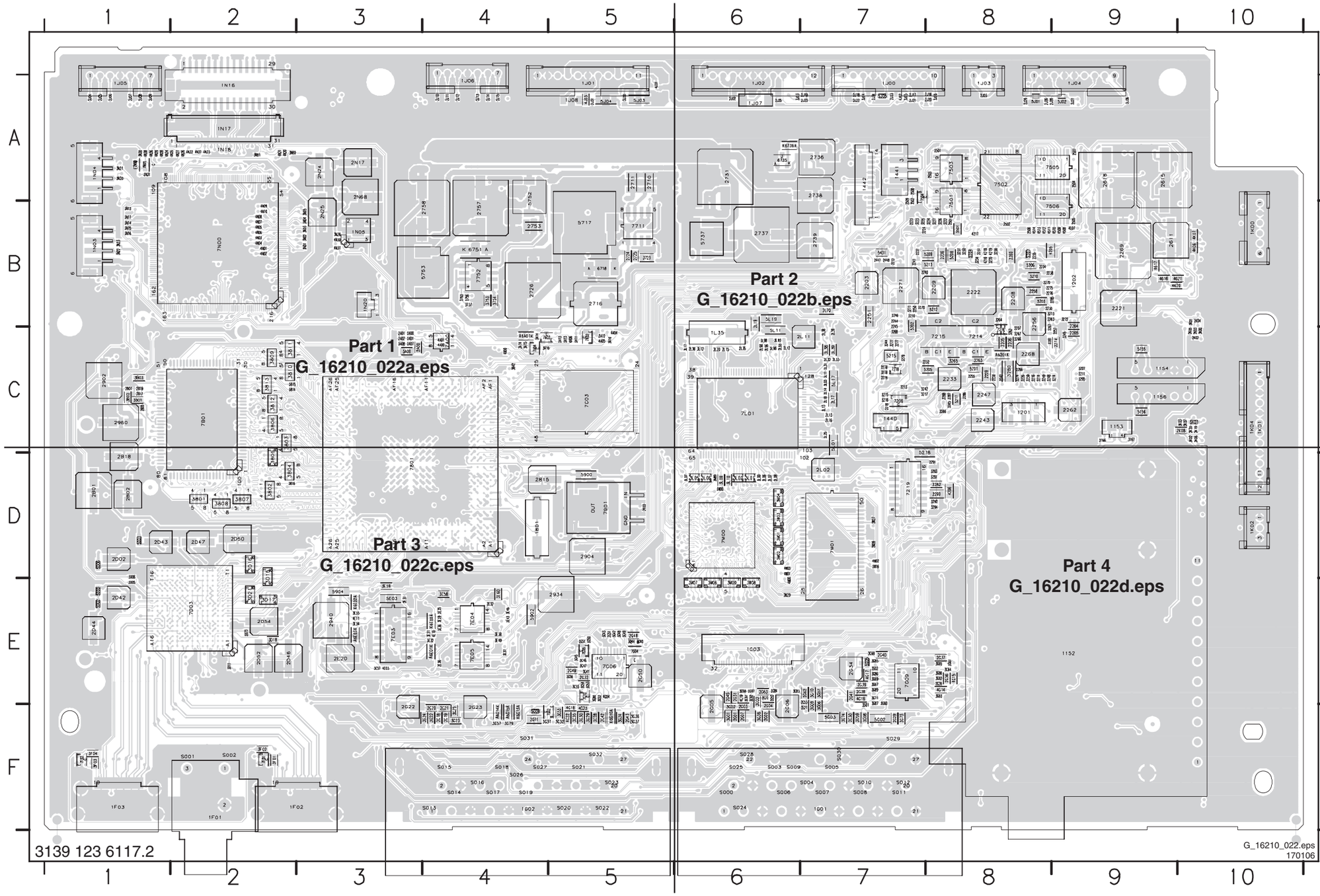

Layout Small Signal Board (Top Side Part 1)

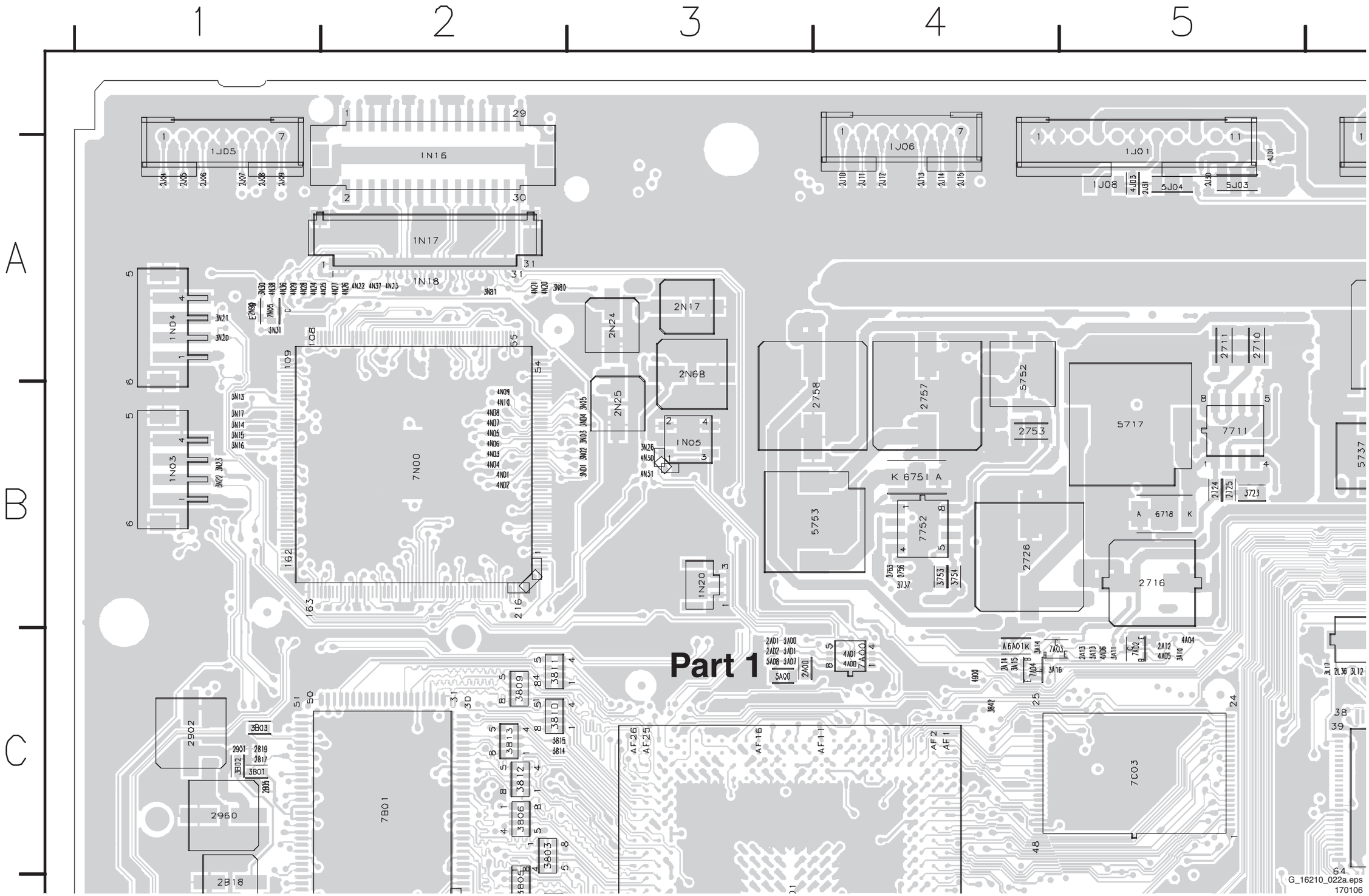

Layout Small Signal Board (Top Side Part 2)

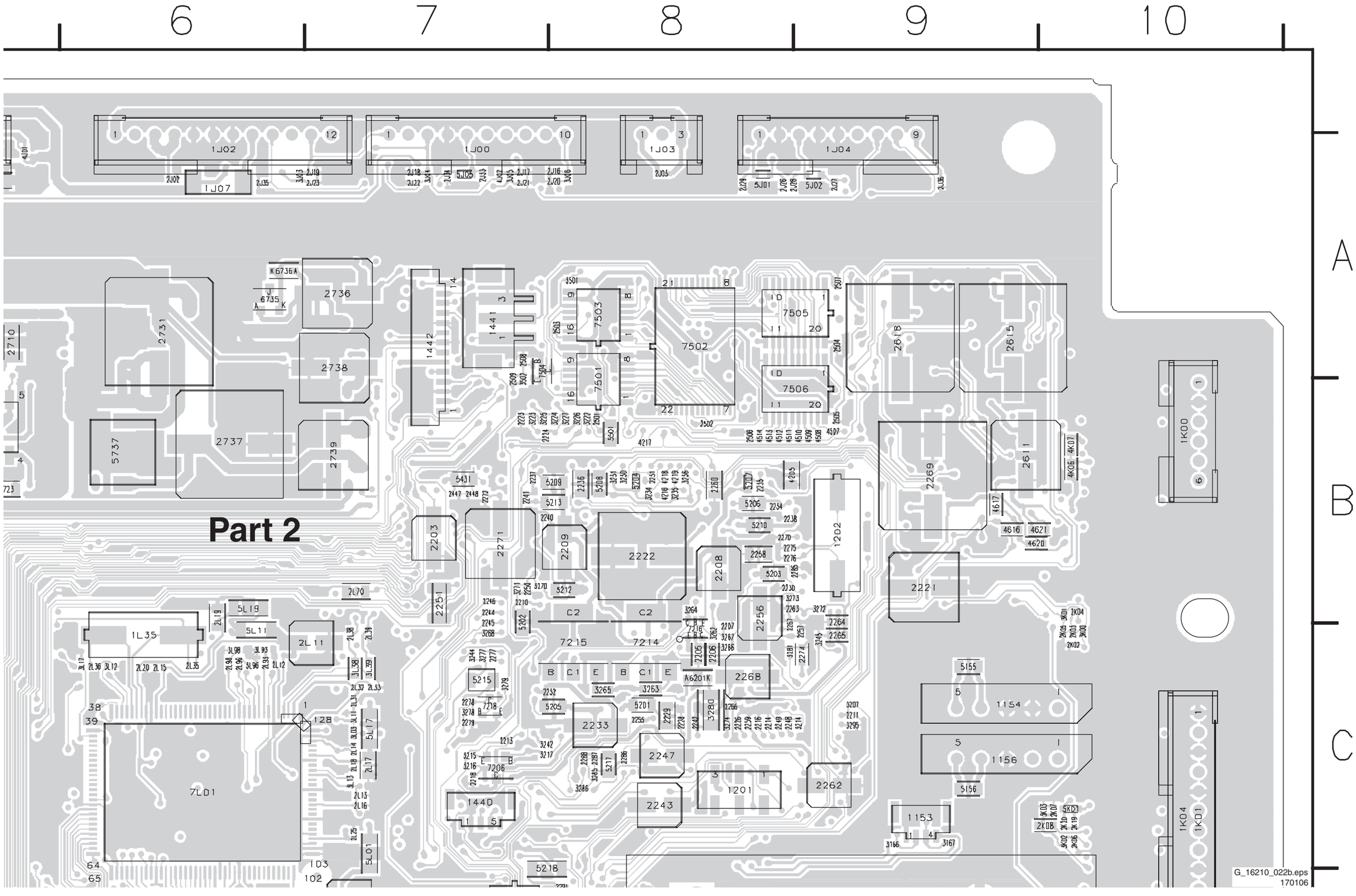

Layout Small Signal Board (Top Side Part 3)

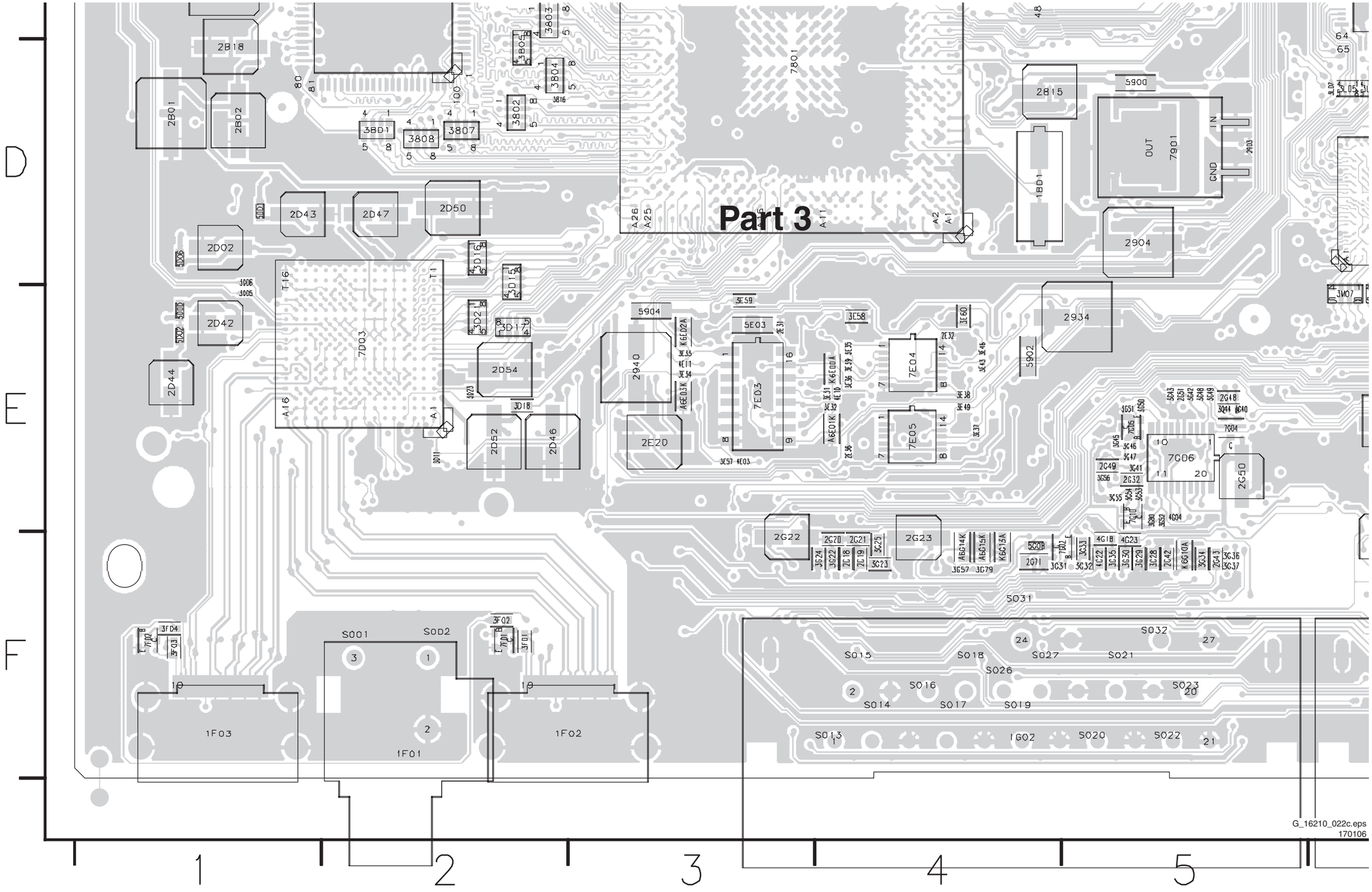

Layout Small Signal Board (Top Side Part 4)

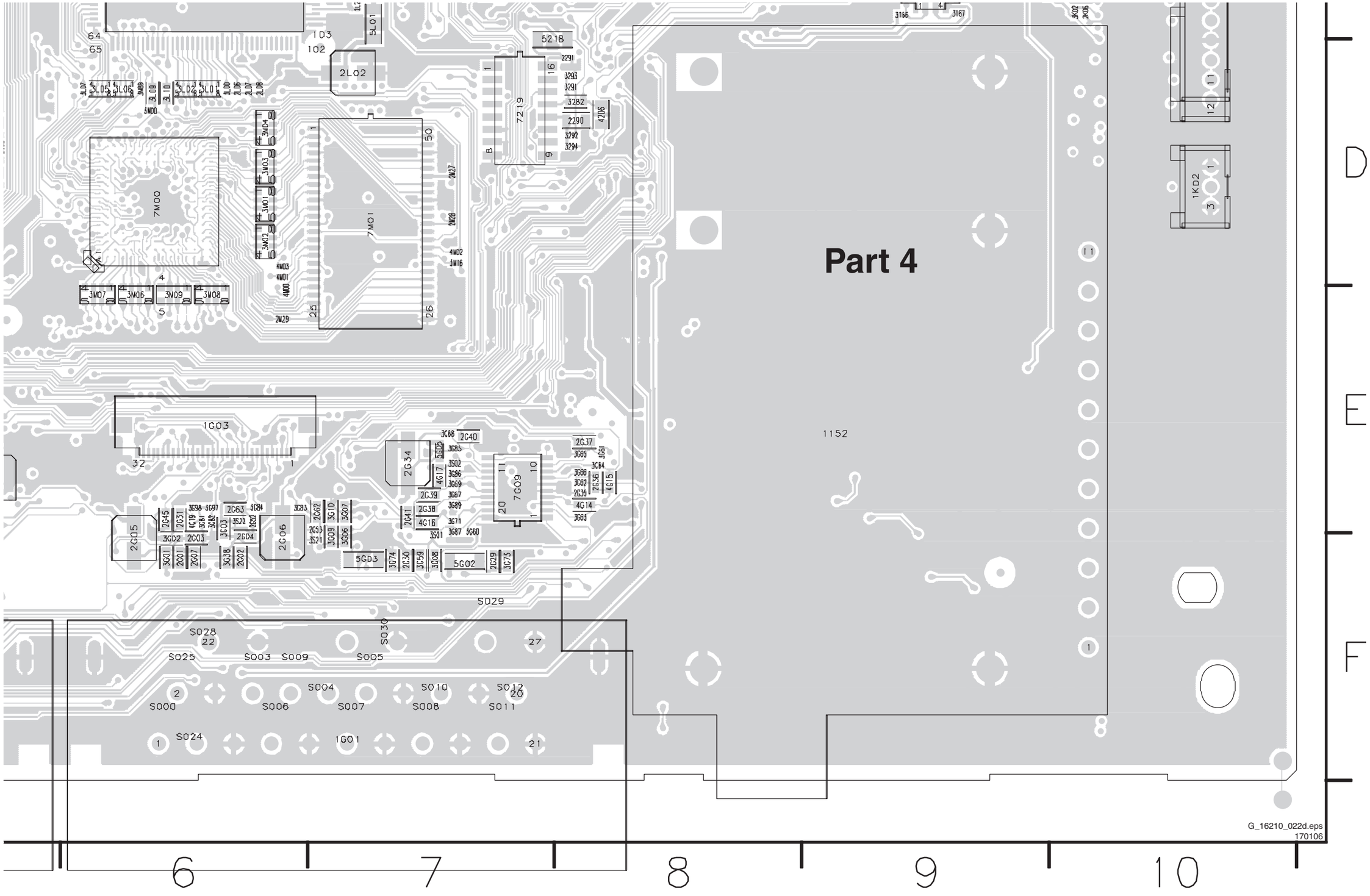

Layout Small Signal Board (Bottom Side Overview)

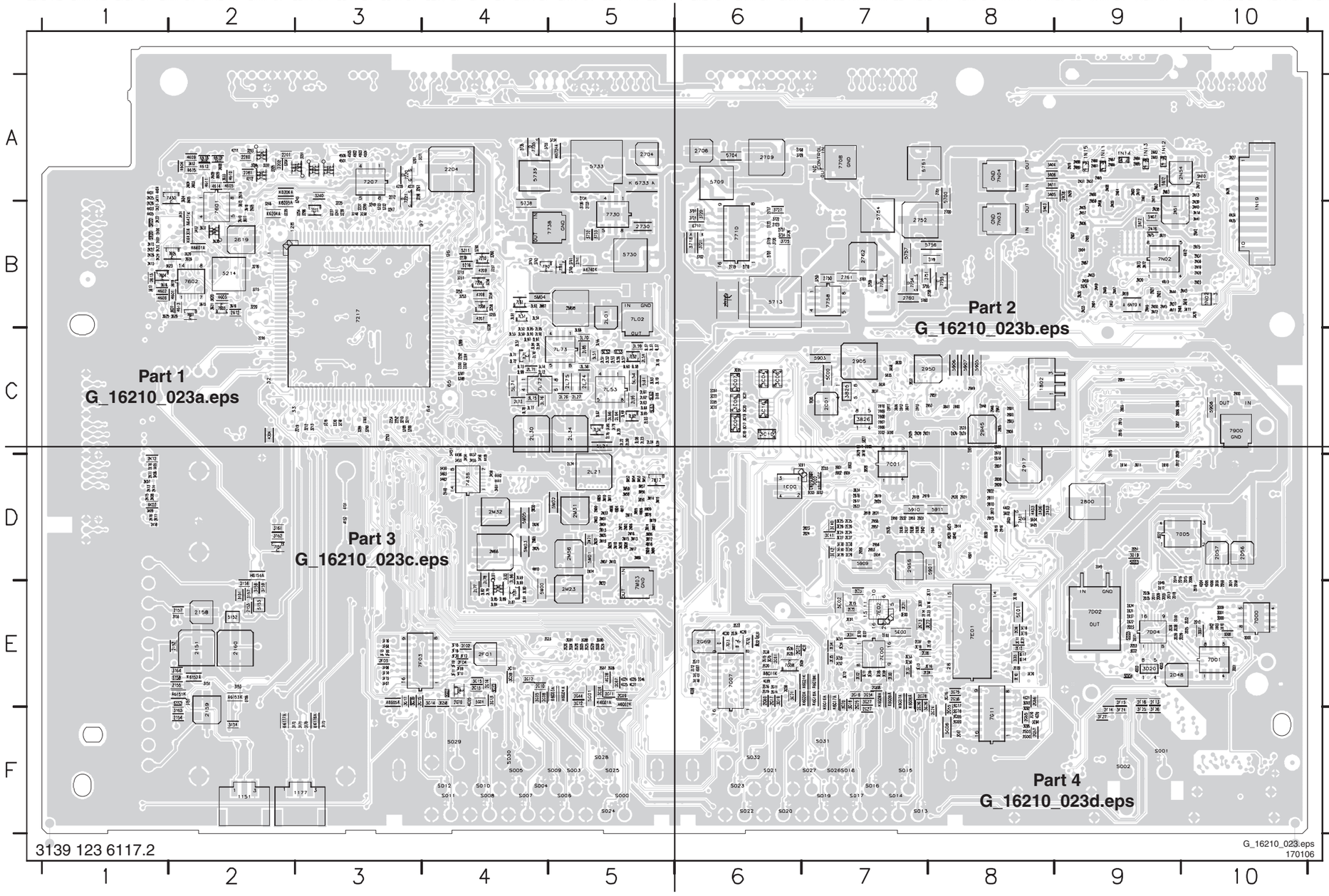

1151 F2 2204 A4 2609 A2 2730 B5 2810 D8 2913 C7 2937 D7 2B06 C9 2D12 E10 2D48 E9 2E14 E7 2F13 E9 2G55 F8 2K18 D1 2L37 C5 2L97 C4 2M22 E5 2N10 A9 2N38 B9 2N63 A9 3156 E2 3213 C3 3254 B3 3453 D4 3625 B1 3734 A5 3827 C7 3A06 D8 3D03 E10 3E15 E8 3E54 E7 3L86 D4 4611 A2 5N04 A8 7M03 E5
1177 F3 2212 A3 2610 B2 2733 B5 2811 D8 2914 D8 2938 D7 2B07 C9 2D13 E9 2D49 E9 2E15 E7 2F14 F9 2G56 E8 2K21 B1 2L51 C5 2M00 D5 2M23 E5 2N11 A9 2N39 B10 2N64 A9 3157 E2 3218 C3 3255 B4 3454 D4 3626 B2 3735 A4 3828 D7 3C00 C7 3D07 E10 3E16 E8 3E55 E7 3L87 E4 4612 A2 5N05 A8 7M17 D5
1802 C8 2219 C3 2612 B2 2734 A5 2812 D8 2915 D8 2939 D7 2B08 C9 2D14 D9 2D51 D9 2E16 E8 2F15 E9 2G57 F8 2K22 B1 2L52 C5 2M01 D5 2M24 D5 2N12 A10 2N40 B10 2N65 A9 3158 E2 3219 C3 3256 B4 3455 D4 3627 B2 3736 B5 3829 C7 3C01 D7 3D08 E10 3E17 E8 3F05 E3 3L88 E4 4613 B2 5N06 A8 7N02 B9
1C00 D6 2220 C3 2613 B1 2735 A4 2813 C8 2916 D8 2941 D8 2B09 D9 2D15 D10 2D53 E9 2E17 E8 2F16 E9 2G58 E6 2K23 B1 2L53 C5 2M02 D5 2M25 D4 2N13 A10 2N41 B10 2N66 A9 3159 E2 3220 B2 3257 B4 3456 D4 3628 B2 3740 B5 3830 C7 3C02 D7 3D09 E10 3E18 E8 3F06 E3 3L89 E4 4614 A2 5N07 B9 7N03 B8
1N02 B10 2225 B3 2614 A2 2741 B5 2814 D8 2917 D8 2942 D7 2B10 D9 2D16 D9 2D55 E9 2E18 E8 2G08 E4 2G60 E6 2K24 B1 2L54 C5 2M03 D5 2M26 D4 2N14 B10 2N42 B10 2N67 B9 3161 D2 3221 A3 3258 B4 3458 D4 3629 B2 3741 B5 3831 C7 3C03 D7 3D10 E10 3E19 E7 3F07 E3 3L90 E4 4615 A2 5N10 A10 7N04 A8
1N11 A9 2227 B3 2616 A2 2749 B8 2816 D7 2918 D7 2945 C8 2B11 D9 2D17 E9 2D56 D10 2E19 E8 2G09 E5 2G61 E6 2K25 A1 2L55 C5 2M04 D5 2M30 D4 2N15 B10 2N43 B10 2N69 B9 3162 D2 3228 C4 3259 B4 3459 D4 3630 B2 3742 B4 3832 C7 3C04 C6 3D19 D9 3E20 E8 3F08 E3 3L91 E4 4618 A2 5N11 A8
1N12 A9 2239 B4 2617 A2 2750 B7 2817 D7 2919 D7 2946 C8 2B12 D9 2D18 E9 2D57 D10 2E21 E7 2G10 E4 2G65 F8 2K26 B1 2L61 C5 2M05 D5 2M31 D5 2N16 B10 2N44 B9 2N75 B9 3163 F2 3229 B2 3260 B4 3461 D4 3631 B2 3743 B4 3834 C7 3C05 C6 3D20 E9 3E21 E8 3F09 E4 3L92 C4 4619 A2 5N12 A9
1N13 A9 2252 C3 2619 B2 2751 B7 2818 D7 2920 D8 2947 C8 2B13 C9 2D21 E9 2D58 E10 2E22 E7 2G11 E5 2G66 E8 2K27 B1 2L62 C5 2M06 D5 2M32 D4 2N19 A9 2N45 B9 2N76 B9 3164 E2 3232 B3 3261 A3 3462 D4 3632 A2 3750 B7 3835 C7 3C06 C6 3D22 E9 3E22 E7 3F10 E4 3L94 C4 4801 D8 5N72 B9
1N14 A9 2253 C3 2700 B8 2752 B7 2819 D7 2921 D8 2948 C8 2B14 D9 2D22 E9 2D59 E10 2E23 E7 2G12 E4 2G67 E5 2K28 B1 2L63 C5 2M07 D5 2M33 D5 2N20 B9 2N46 B9 2N80 A9 3170 F3 3233 B3 3275 B2 3463 D4 3633 A2 3755 B7 3836 C7 3C07 C6 3D24 E10 3E23 E8 3F11 E4 3L95 C4 4A02 D8 6151 E2
1N15 A9 2254 C3 2701 A8 2759 B6 2820 D7 2922 D8 2949 C8 2B15 C9 2D23 E9 2E00 E7 2E24 D7 2G13 E4 2G68 E7 2L01 B5 2L64 C5 2M08 D5 2M56 D5 2N21 B9 2N47 B9 2N81 A9 3171 F3 3237 B3 3276 B2 3604 A2 3701 B6 3758 B8 3837 C7 3C08 C6 3D26 E10 3E24 D7 3F12 E4 3L97 C4 4A03 D8 6152 E2
1N19 B10 2273 B4 2702 B6 2760 B7 2821 D7 2923 C8 2950 C8 2B16 C9 2D24 E9 2E01 E7 2E25 D7 2G14 E4 2G69 E6 2L03 C5 2L65 C5 2M09 D5 2M65 D4 2N22 B9 2N48 B9 2N82 A9 3172 F2 3238 B3 3283 C3 3605 A2 3702 B6 3759 B7 3838 C7 3C09 C6 3D27 D9 3E25 D7 3F13 E3 3L99 C4 4D02 E9 6153 E2
2151 E2 2280 A2 2704 A5 2761 B7 2822 D7 2924 C8 2951 C8 2C00 C7 2D25 E10 2E02 E7 2E26 D7 2G15 E3 2G70 E4 2L04 C5 2L71 C4 2M10 D5 2M66 D4 2N23 B10 2N49 B9 2N83 A9 3173 F3 3239 B3 3284 C3 3609 A2 3709 A6 3760 B7 3839 D8 3C10 C6 3E00 E7 3E26 D7 3F14 E3 3M10 D5 4D03 E9 6154 D2
2152 E2 2281 A2 2706 A6 2762 B7 2823 D7 2925 C8 2952 C8 2C01 C7 2D29 E10 2E03 E7 2E27 D7 2G16 E7 2G72 E6 2L05 C5 2L72 C4 2M11 D5 2M67 B4 2N26 B9 2N50 B9 2N84 A9 3201 A3 3240 A3 3287 C4 3610 B2 3718 B6 3761 B7 3840 D8 3C16 C6 3E01 E7 3E27 D7 3F15 E3 3M11 D5 4D04 E10 6176 F3
2153 E2 2282 C4 2708 A6 2800 D9 2824 D7 2926 C8 2953 D7 2C02 C7 2D30 E9 2E04 E7 2E28 D7 2G17 E6 2K00 B1 2L09 C5 2L73 C4 2M12 D5 2M68 B5 2N27 B9 2N51 B9 2N85 A9 3202 A2 3241 B3 3288 C4 3611 B2 3719 B6 3800 C7 3841 C8 3C17 C6 3E02 E7 3E28 D7 3F16 E3 3M12 D5 4D05 E10 6177 F2
2154 F2 2283 C4 2709 A6 2801 C8 2900 C10 2927 C7 2954 D7 2C03 D7 2D31 E9 2E05 E8 2E29 D7 2G24 F8 2K01 B1 2L10 C4 2L74 C5 2M13 D5 2N01 B9 2N28 A9 2N54 A9 2N86 A9 3203 A2 3243 A3 3289 C4 3612 B2 3720 B6 3817 C7 3900 C8 3C18 C6 3E06 E7 3E29 D7 3F17 E4 3M13 D5 4D06 E10 6204 B2
2155 E2 2284 C4 2717 B6 2802 C8 2905 C7 2928 C7 2955 D7 2C04 C6 2D32 E10 2E06 E8 2E30 D7 2G25 E7 2K10 D1 2L21 D5 2L75 C5 2M14 D5 2N02 B9 2N29 A9 2N55 B9 2N87 A9 3204 A2 3246 B2 3290 C3 3615 B2 3721 B6 3818 C7 3901 D7 3C19 C6 3E07 E7 3E30 D7 3F18 E4 3M14 D5 4G05 E4 6205 B2
2156 E2 2292 C4 2718 B6 2803 C8 2906 C7 2929 C7 2956 D7 2C05 C6 2D34 E9 2E07 E7 2E33 E7 2G26 E7 2K11 D1 2L22 C5 2L76 C5 2M15 D5 2N03 B9 2N30 B9 2N56 B9 2N88 A9 3205 A2 3247 B3 3296 B3 3616 B2 3722 B6 3819 D8 3902 D7 3C20 C6 3E08 E7 3E40 D7 3F19 E4 3M15 D5 4G07 E6 6206 A2
2157 E2 2293 C2 2719 B6 2804 C8 2907 C7 2930 D7 2957 D7 2D00 E10 2D35 E9 2E08 E7 2E34 E7 2G27 F7 2K12 D1 2L23 C5 2L77 E4 2M16 D5 2N04 B9 2N31 A9 2N57 B9 2N89 A9 3206 A2 3248 B3 3297 A3 3617 B1 3724 B6 3820 D8 3903 D7 3C21 C6 3E09 E7 3E41 D7 3F20 E4 3M28 D5 4G08 E6 6430 B2
2158 E2 2449 D4 2720 B6 2805 C8 2908 C7 2931 D7 2958 D7 2D01 E10 2D36 E9 2E09 E8 2E35 E7 2G28 E7 2K13 D1 2L24 D5 2L78 D4 2M17 D5 2N05 B9 2N32 A9 2N58 B9 3151 E2 3208 C3 3249 B3 3298 A3 3618 B1 3725 B6 3822 D8 3904 D7 3C22 C6 3E10 E7 3E42 D7 3F24 F9 3M29 D5 4G09 E6 6431 B2
2159 F2 2603 A2 2721 B6 2806 C8 2909 C7 2932 D7 2959 D7 2D08 D10 2D37 E9 2E10 E8 2F01 E4 2G44 E5 2K14 D1 2L26 C5 2L79 E4 2M18 D5 2N06 B9 2N33 B9 2N59 B9 3152 E2 3209 C3 3250 B4 3299 B3 3619 B2 3726 B6 3823 D8 3A02 D8 3C23 C6 3E11 E7 3E50 E7 3F25 F9 3M50 D5 4G20 F8 6601 B2
2160 E2 2604 A2 2722 B6 2807 D8 2910 C7 2933 D7 2A03 D8 2D09 E9 2D38 E9 2E11 E8 2F02 E4 2G46 E5 2K15 D1 2L27 C5 2L92 C4 2M19 D5 2N07 B9 2N35 B10 2N60 A9 3153 E2 3210 C3 3251 B4 3431 B2 3620 B2 3727 B6 3824 D7 3A03 D8 3D00 E10 3E12 E7 3E51 E7 3F26 F9 3M51 D5 4G21 E8 6717 B6
2201 A2 2605 B2 2723 B6 2808 D8 2911 C7 2935 D7 2B03 C9 2D10 E10 2D39 E9 2E12 E8 2F03 E3 2G47 F8 2K16 D1 2L30 C4 2L94 C4 2M20 D5 2N08 A9 2N36 B10 2N61 A9 3154 F2 3211 C3 3252 B4 3432 B2 3621 B2 3732 B5 3825 C7 3A04 D8 3D01 E10 3E13 E7 3E52 E7 3F27 F9 3M52 D5 4G24 E5 6733 A5
2202 A2 2608 A2 2727 B6 2809 D8 2912 C7 2936 D7 2B04 C9 2D11 E9 2D45 D9 2E13 E7 2F04 E4 2G54 E7 2K17 D1 2L34 C5 2L95 C4 2M21 D5 2N09 B9 2N37 B10 2N62 A9 3155 E2 3212 C3 3253 B4 3451 C4 3623 B2 3733 B5 3826 C7 3A05 D8 3D02 E10 3E14 E8 3E53 E7 3G04 E5 3M53 D5 4G25 E5 6734 A5
3G05 E4 3M54 D5 4G26 E5 6740 B5
3G11 E4 3M55 D5 4G27 E5 6G01 E5
3G12 E4 3M56 D5 4G28 E5 6G02 E5
3G13 E4 3M57 D5 4G29 E6 6G03 E5
3G14 E4 3M58 D5 4G30 E6 6G04 E5
3G15 E4 3M59 D5 4G31 E7 6G05 E3
3G16 E3 3M78 D5 4K01 A1 6G06 E7
3G17 E3 3M79 D5 4K02 D1 6G07 E7
3G18 E7 3M86 D5 4K03 B1 6G08 E7
3G19 E6 3M87 D5 4K04 A1 6G09 E7
3G20 E7 3M88 D5 4K05 B1 6G11 E6
3G21 E6 3M90 D5 4L37 C5 6G16 E7
3G26 E7 3N10 B10 4M04 D5 6G17 E7
3G27 E7 3N11 B10 4M05 D5 6G18 E7
3G39 E4 3N12 B9 4M06 D5 6G19 E7
3G58 E4 3N19 B9 4M08 D5 6G20 E7
3G70 E6 3N27 A10 4M09 D5 6G21 E7
3G72 E5 3N28 A10 4M10 D4 6N19 B9
3G75 E8 3N29 B10 4M16 D5 7151 D2
3G76 E8 3N71 B9 4M17 D5 7201 A3
3G77 E8 3N72 B9 4N11 B9 7202 A3
3G78 F8 3N73 B9 4N12 B10 7203 A3
3G88 E5 3S00 F8 4N13 B9 7204 A2
3G90 E5 3S03 F8 4N34 B10 7205 A2
3G91 E5 3S04 E5 4N35 B10 7207 A3
3G92 F8 3S05 E5 5151 E2 7208 B4
3G93 E8 3S06 E5 5152 E2 7209 B4
3G94 F8 3S07 E5 5153 E2 7210 B4
3G95 F8 3S08 E5 5157 E2 7211 B3
3G96 F8 3S09 E7 5158 E2 7217 B3
3G99 F8 3S10 F8 5211 B4 7220 A3
3K05 D1 3S11 E6 5214 B2 7221 A3
3K06 D1 3S12 E6 5216 B4 7430 A2
3K07 D1 3S13 E6 5700 A8 7436 D4
3K08 D1 3S14 E6 5704 A6 7601 B2
3K09 D1 3S15 E6 5709 A6 7602 B2
3K11 A1 3S16 E6 5713 B6 7603 B2
3K12 B1 3S17 E6 5730 B5 7604 B1
3K13 B1 3S18 E6 5733 A5 7605 B2
3L04 C5 3S19 E6 5735 A4 7606 B2
3L08 C5 3S20 E6 5738 B4 7607 B2
3L18 C5 3S23 E4 5751 A7 7708 A7
3L19 C5 3S24 E5 5754 B7 7710 B6
3L20 C5 3S25 E5 5756 B8 7730 B5
3L36 C5 3S26 E5 5757 B7 7735 A4
3L37 C5 3S28 E5 5901 D8 7738 B5
3L49 C5 3S29 E5 5903 C7 7741 B5
3L50 C4 3S30 E6 5905 C8 7742 B4
3L51 C4 3S31 E6 5906 C8 7754 B7
3L52 C4 3S32 E6 5907 C8 7755 B8
3L53 C4 3S33 E6 5908 C10 7756 B7
3L54 B4 3S34 E6 5909 D7 7758 B7
3L55 C5 3S35 E6 5910 D7 7900 C10
3L56 C5 3S36 E6 5911 D8 7A01 D8
3L57 C5 4151 D3 5C00 C7 7C01 D7
3L58 C5 4152 D3 5D03 D9 7C02 D7
3L59 C5 4204 C2 5D04 E9 7D00 E10
3L60 C5 4207 B4 5D05 E9 7D01 E10
3L61 B4 4208 B4 5E00 E7 7D02 E9
3L62 B4 4209 B4 5E01 E8 7D04 E9
3L63 C5 4211 A2 5E02 E7 7D05 D10
3L64 C5 4212 A2 5G01 E5 7E00 E7
3L65 C5 4220 A3 5G04 E4 7E01 E8
3L66 C5 4221 A3 5G06 F8 7E02 E7
3L67 C5 4436 D4 5G07 E4 7F03 E3
3L68 C5 4437 D4 5K00 B1 7G01 E4
3L69 D4 4439 D4 5K02 B1 7G07 E6
3L70 C5 4440 D4 5L21 C5 7G08 E6
3L71 C4 4441 D4 5L51 C5 7G11 F8
3L72 C4 4501 A3 5L52 C5 7G12 E6
3L73 C4 4502 A3 5L53 C5 7G13 E6
3L74 C4 4503 A3 5L54 C5 7L02 B5
3L75 C4 4504 A3 5L61 C5 7L51 B4
3L76 C4 4505 A3 5L62 C5 7L52 C5
3L77 C4 4506 A3 5L63 C5 7L53 C5
3L78 C4 4601 B2 5L71 C4 7L61 B4
3L79 C5 4602 B1 5M00 E4 7L62 C5
3L80 C5 4603 B2 5M01 D5 7L71 C4
3L81 D4 4604 A2 5M02 D5 7L72 C4
3L82 E4 4605 A2 5M03 D4 7L73 C5
3L83 D4 4606 B1 5M04 B4 7L74 C5
3L84 E4 4609 A2 5M05 D4 7L80 E4
3L85 E4 4610 A2 5N03 B8 7L81 E4

Layout Small Signal Board (Bottom Side Part 1)

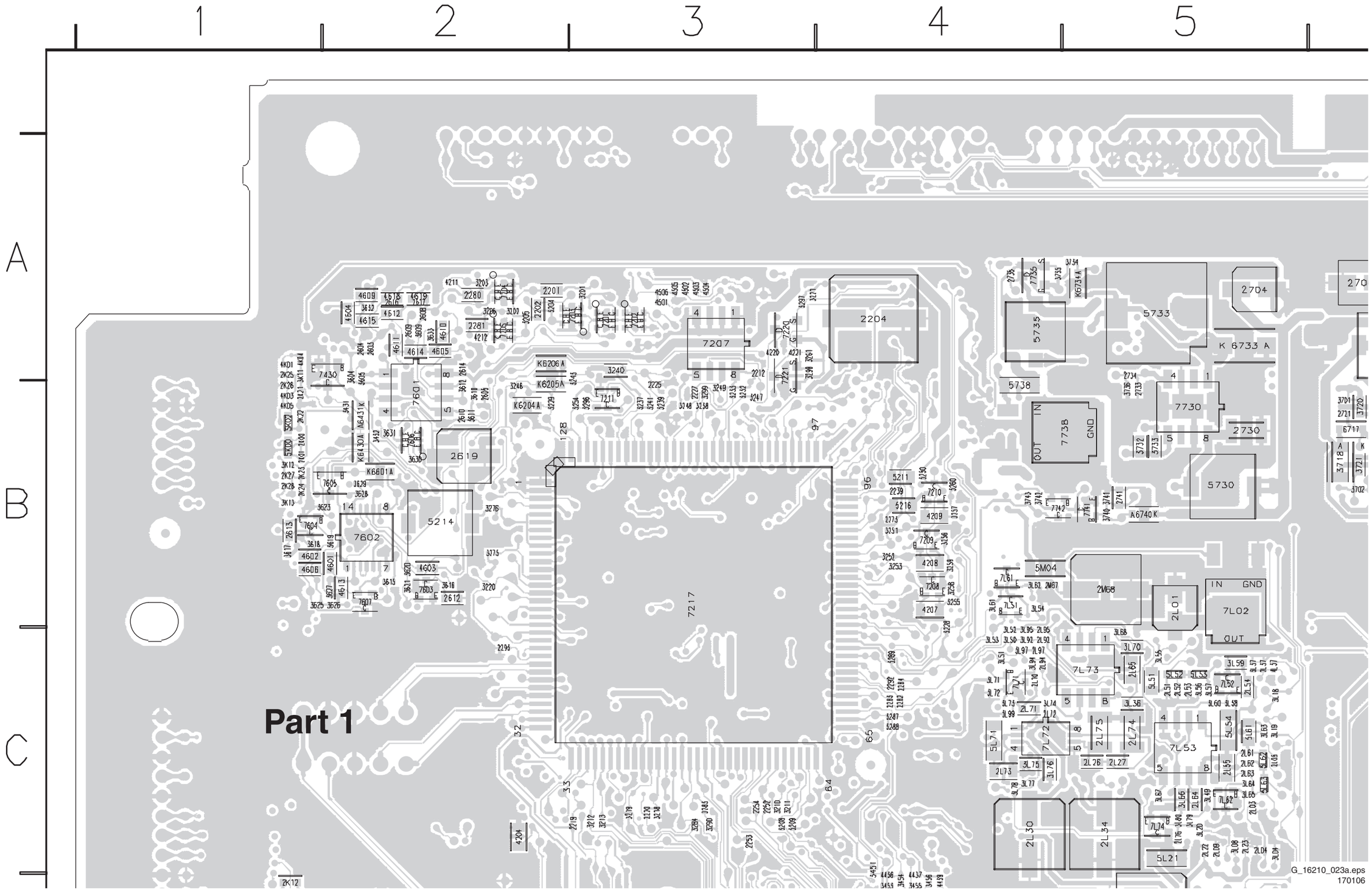

Layout Small Signal Board (Bottom Side Part 2)

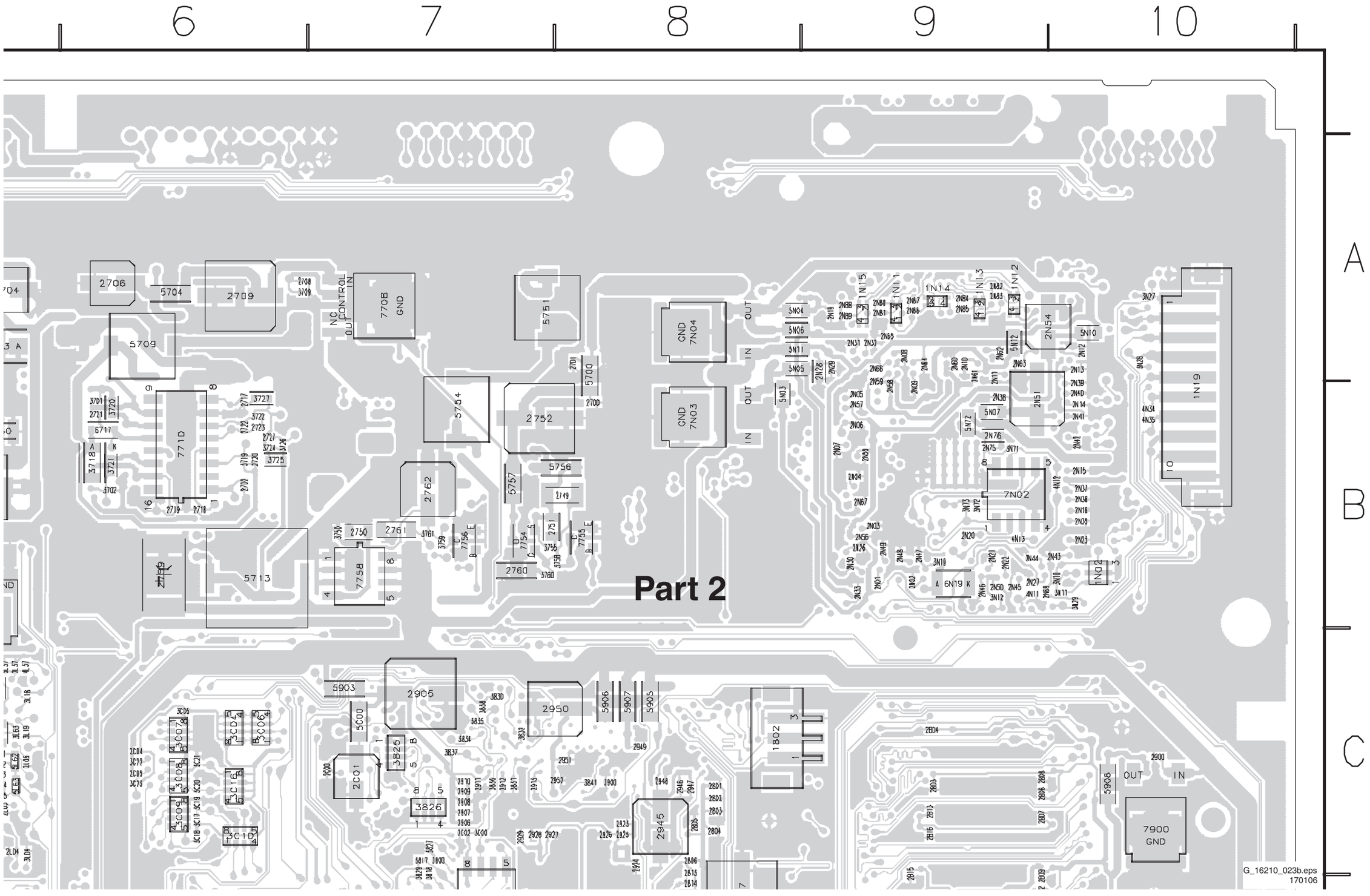

Layout Small Signal Board (Bottom Side Part 3)

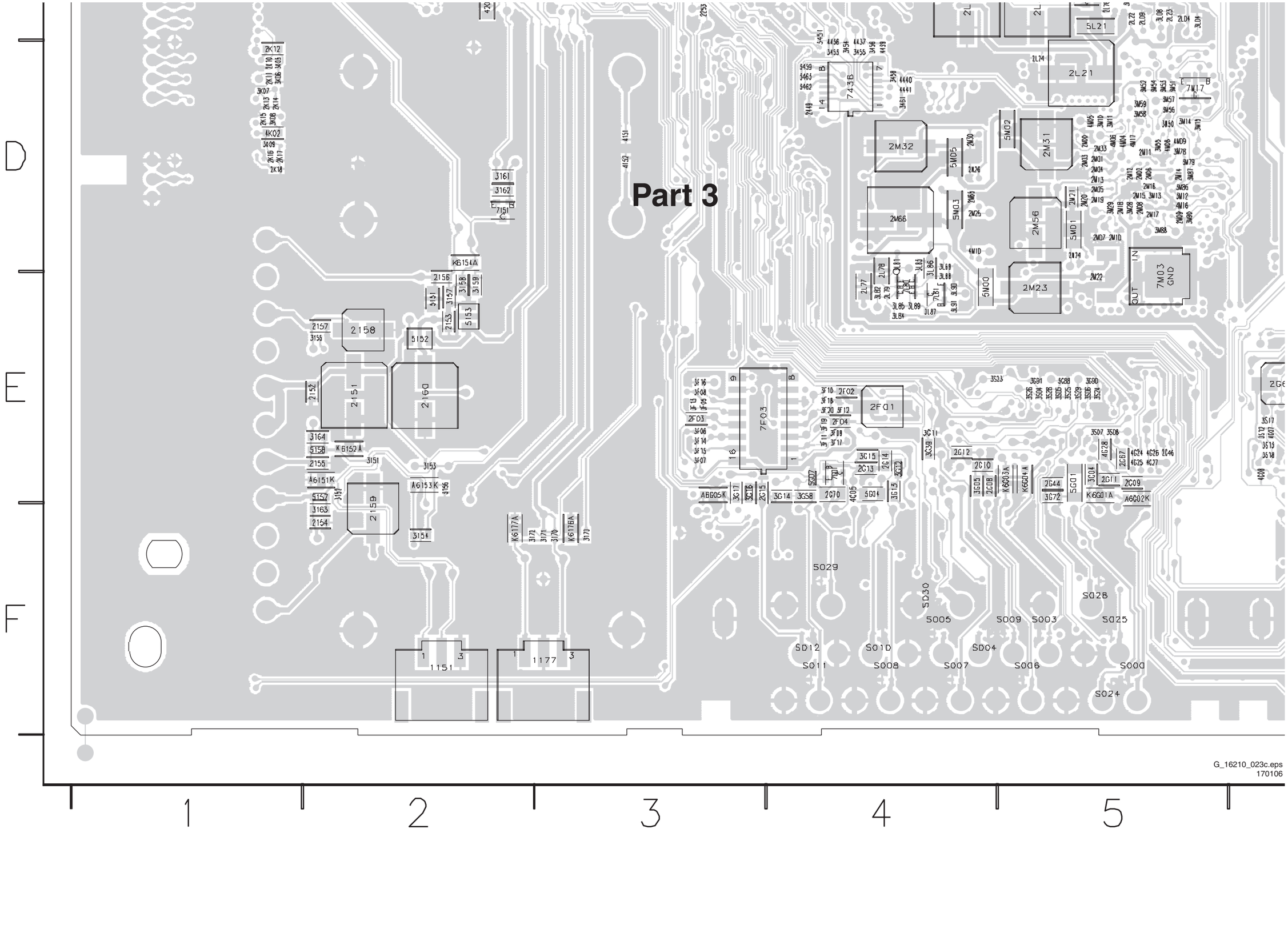

Layout Small Signal Board (Bottom Side Part 4)

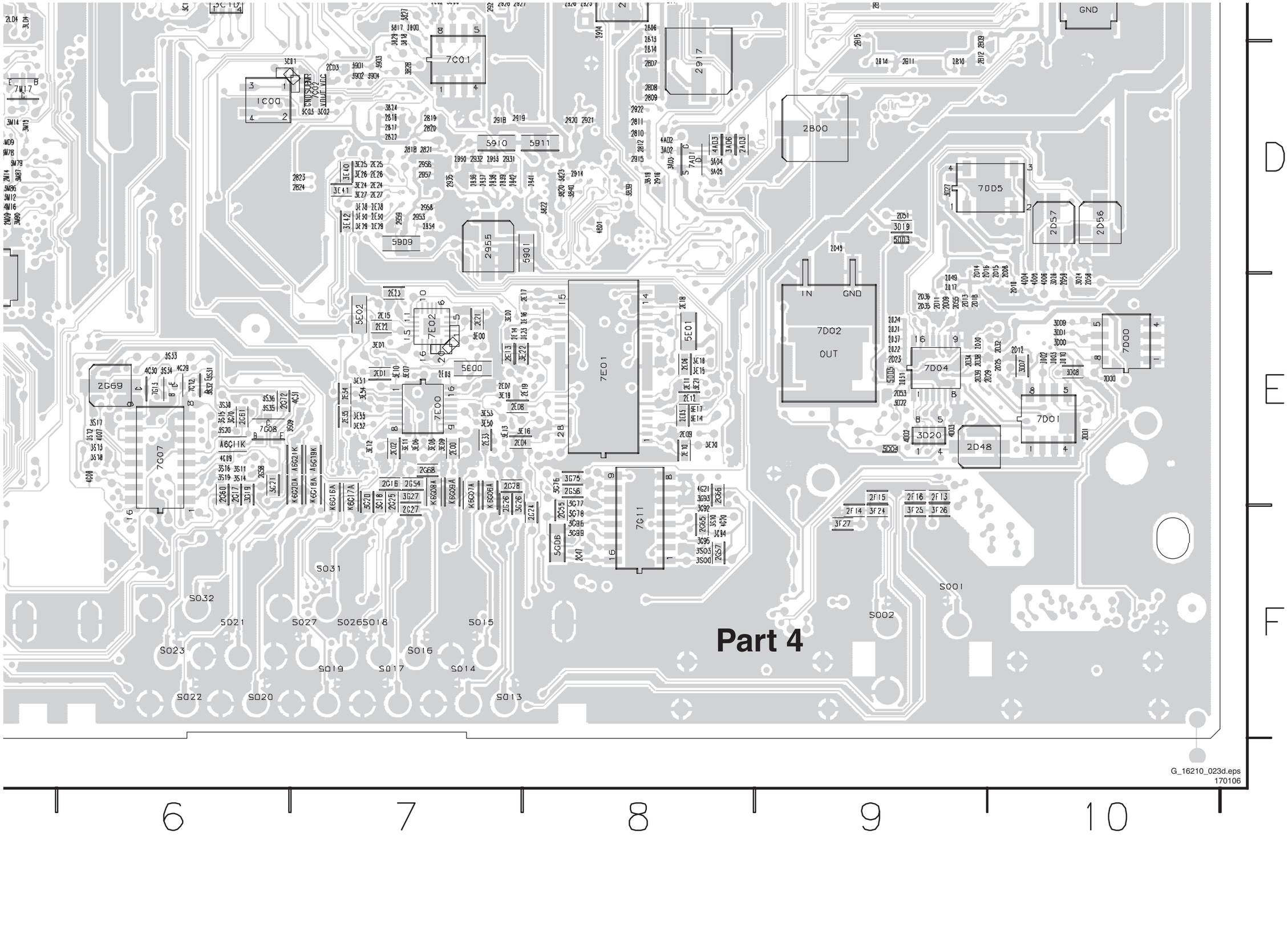

Audio Panel: Amplifier

2D11 B2	2D23 E14	2D37 G6	2D46 H10	2D55 F2	2D66 F9	3D13 A2	3D22 C5	3D39-1 F4	3D43 E1	3D56 F2	3D69 G10	3D78 E12	3D88 C10	5D14 G7	7D10-3 F10	7D16-2 F4	7D23-1 E13	9D03-1 F6	ID11 E15	ID22 F12	ID31 B8	ID40 G7	ID49 A3	ID61 C4	ID74 F9	ID86 F4
2D14 E7	2D26 F2	2D38 G2	2D47 H2	2D56 F6	2D67 H2	3D14 A2	3D23 D4	3D39-2 E4	3D44 F5	3D57 F9	3D70 G11	3D79 G12	3D90 E9	5D15 G15	7D10-4 B3	7D17 G4	7D23-2 F12	9D03-2 F6	ID12 E11	ID23 F4	ID32 G5	ID41 G15	ID50 B4	ID62 F1	ID75 F11	ID87 F4
2D15 E7	2D27 F9	2D39 F13	2D48 H3	2D57 F14	2D68 H10	3D15 B4	3D24 C4	3D39-3 G3	3D45 F12	3D58 G11	3D71 H3	3D81 G4	3D91 E9	5D16 G2	7D11-1 B5	7D18-1 E5	7D24 E2	9D03-3 F6	ID13 E4	ID24 F9	ID33 G12	ID42 G3	ID51 B4	ID63 C7	ID76 F11	ID91 B10
2D17 E15	2D28 G7	2D40 F13	2D49 H10	2D60 H9	2D70 C4	3D16 B5	3D25 C3	3D39-4 E5	3D46 F6	3D60 F6	3D72 H11	3D82 C7	3D92 H3	5D18 E6	7D11-2 C5	7D18-2 F5	7D25-1 C8	9D03-4 F6	ID14 E5	ID25 F1	ID34 G3	ID43 G10	ID52 B2	ID66 E9	ID77 E14	ID92 E6
2D18 E15	2D30 F3	2D41 G7	2D50 H10	2D61 H9	2D71 G1	3D17 B2	3D26 D4	3D40-1 F11	3D47 F13	3D61 F13	3D73 H3	3D83 C7	3D93 H10	5D19 E14	7D12-1 C4	7D19 F11	7D25-2 B9	9D04-1 F13	ID15 F12	ID26 F2	ID35 F6	ID44 G4	ID53 B4	ID67 E9	ID78 F12	
2D19 F2	2D31 F11	2D42 G7	2D51 C8	2D62 H9	2D72 F9	3D18 B2	3D34 E3	3D40-2 G11	3D49 E1	3D64 G4	3D74 H11	3D84 B8	5D10 E7	6D10 B4	7D12-2 C4	7D20 E12	7D26-1 C9	9D04-2 F13	ID16 F6	ID27 F10	ID36 G4	ID45 F13	ID54 B3	ID68 E9	ID79 F12	
2D20 F7	2D32 F6	2D43 G14	2D52 E6	2D63 C6	3D10 A3	3D19 B4	3D35 E4	3D40-3 E11	3D50 F1	3D65 G11	3D75 B9	3D85 B8	5D11 E15	6D11 C4	7D14 F4	7D21-1 F12	7D26-2 B10	9D04-3 F13	ID17 F13	ID28 F4	ID37 G11	ID46 H3	ID55 C6	ID69 E12	ID80 F4	
2D21 G14	2D35 F2	2D44 G15	2D53 F7	2D64 E9	3D11 B4	3D20 B5	3D37 E11	3D40-4 E13	3D51 F9	3D67 G3	3D76 G5	3D86 C10	5D12 F6	7D10-1 A3	7D15 E5	7D21-2 F12	7D30 E6	9D04-4 F13	ID20 F2	ID29 F12	ID38 G10	ID47 H11	ID56 C4	ID72 C10	ID82 F5	cD01 D15
2D22 G14	2D36 F10	2D45 H3	2D54 F14	2D65 E9	3D12 B4	3D21 B3	3D38 E11	3D42 C3	3D54 F1	3D68 G3	3D77 E6	3D87 C10	5D13 F14	7D10-2 F3	7D16-1 F5	7D22 G12	7D31 E14	ID10 E7	ID21 F11	ID30 B7	ID39 G2	ID48 B6	ID57 C3	ID73 B9	ID83 F6	cD04 D15
																										cD05 D15

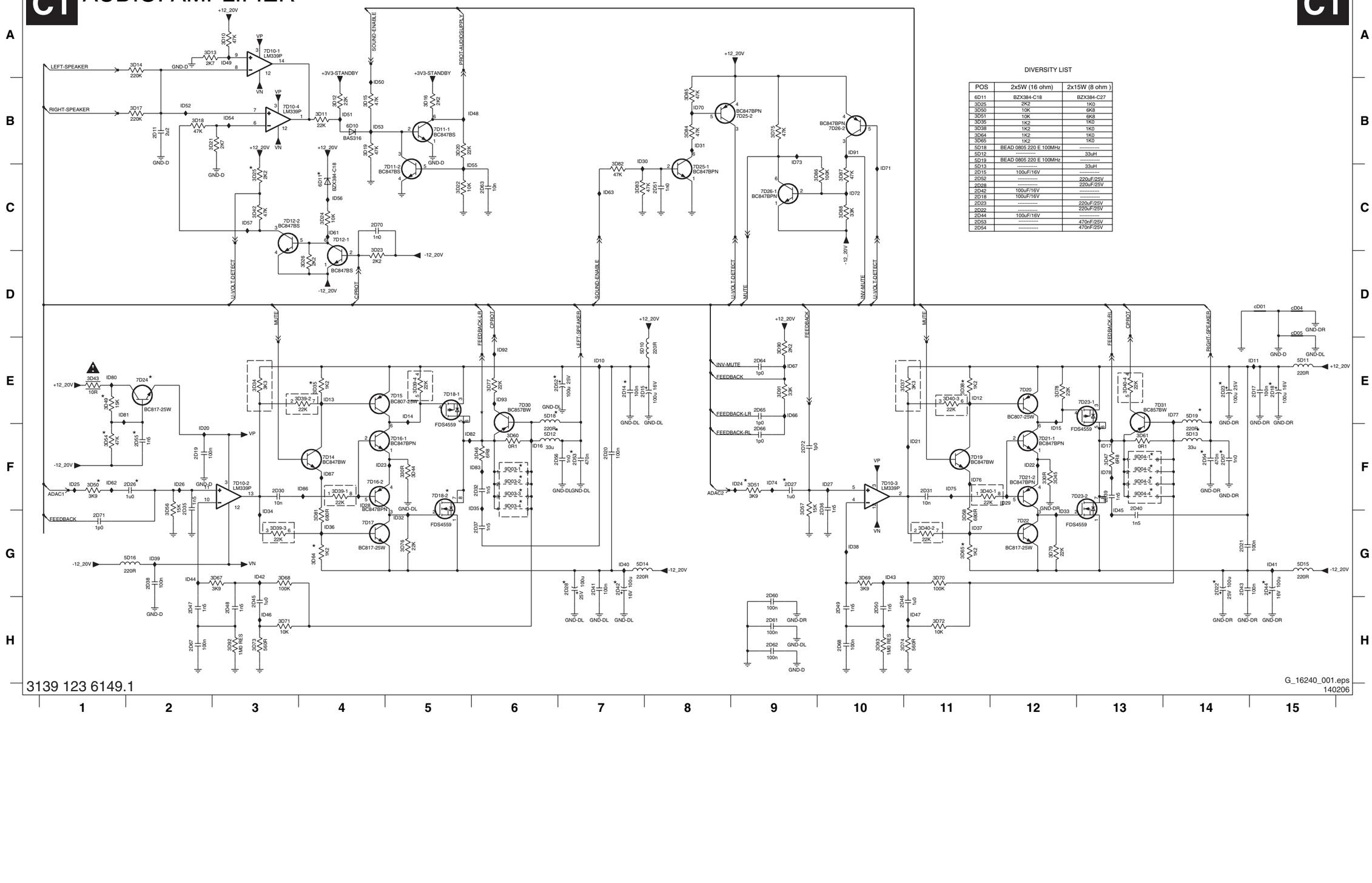

Audio Panel: Amplifier

C2 AUDIO: CONNECTORS

C2

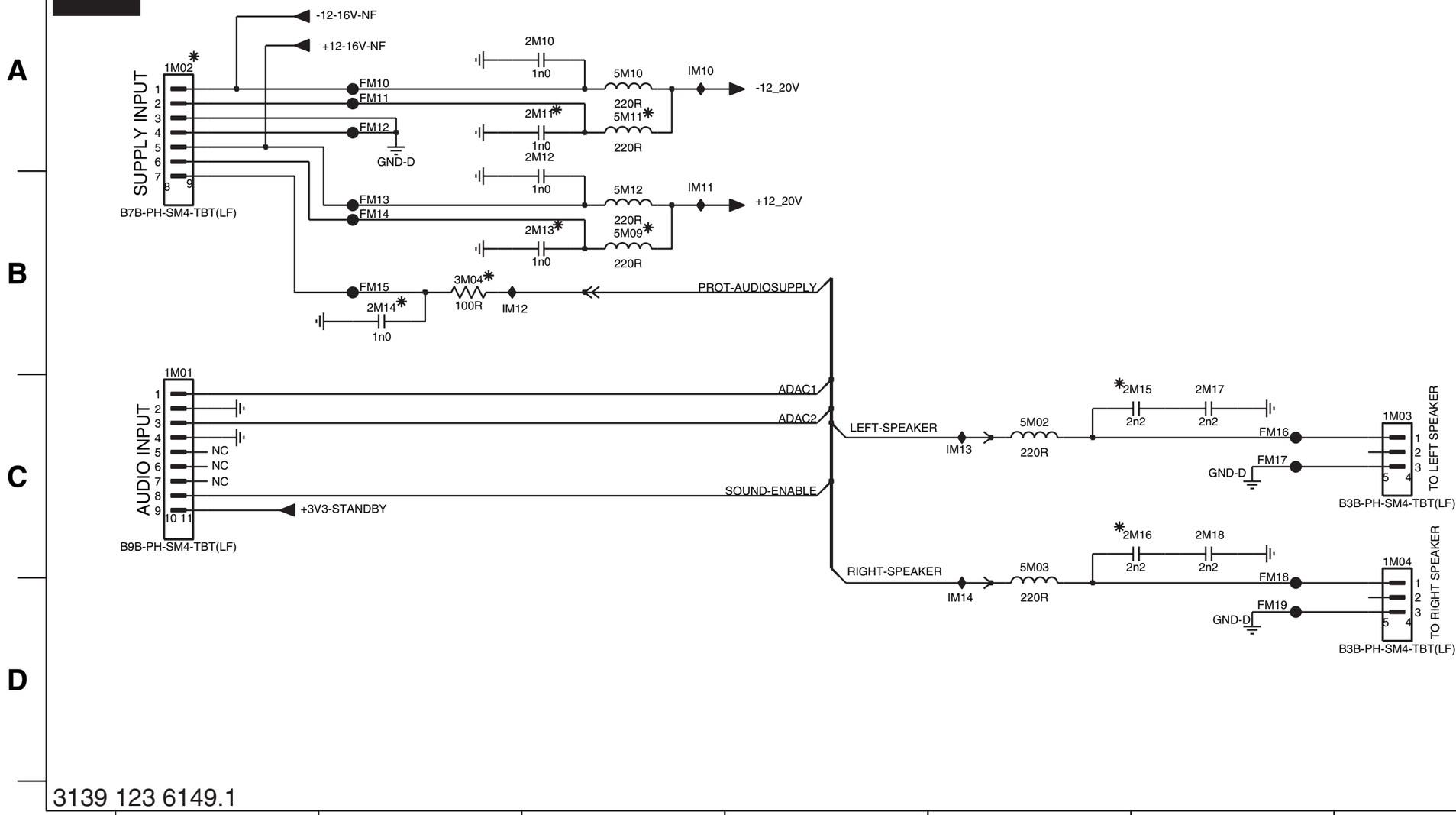

1M01 C1
1M02 A1
1M03 C7
1M04 C7
2M10 A3
2M11 A3
2M12 A3
2M13 B3
2M14 B2
2M15 C6
2M16 C6
2M17 C6
2M18 C6
3M04 B2
5M02 C5
5M03 C5
5M09 B3
5M10 A3
5M11 A3
5M12 B3
FM10 A2
FM11 A2
FM12 A2
FM13 B2
FM14 B2
FM15 B2
FM16 C6
FM17 C6
FM18 D6
FM19 D6
IM10 A3
IM11 B3
IM12 B2
IM13 C5
IM14 D5

3139 123 6149.1

G_16240_002.eps
140206

Layout Audio Panel (Top Side)

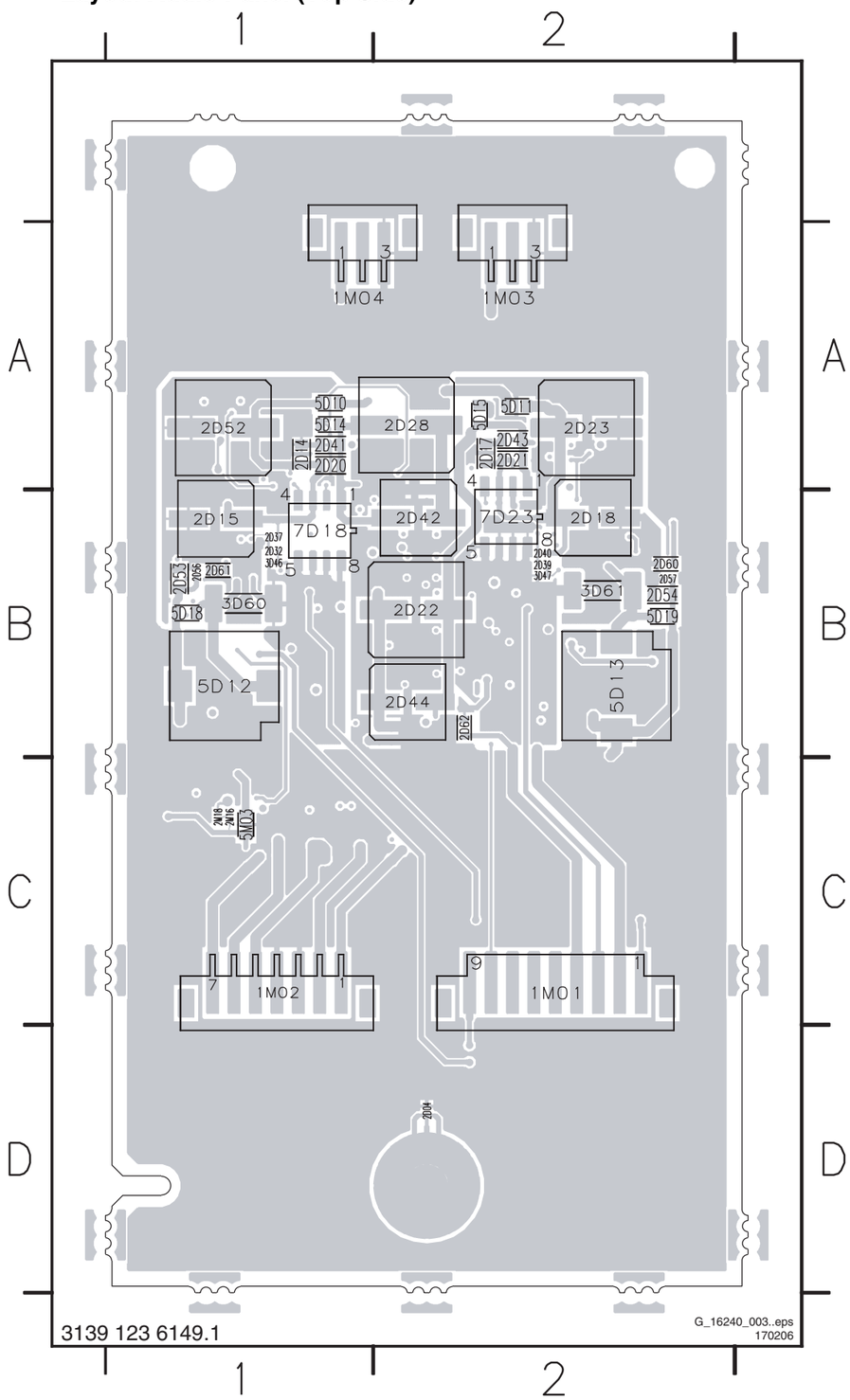

1M01 C2
1M02 C1
1M03 A2
1M04 A1
2D04 D2
2D14 A1
2D15 B1
2D17 A2
2D18 B2
2D20 A1
2D21 A2
2D22 B2
2D23 A2
2D28 A2
2D32 B1
2D37 B1
2D39 B2
2D40 B2
2D41 A1
2D42 B2
2D43 A2
2D44 B2
2D52 A1
2D53 B1
2D54 B2
2D56 B1
2D57 B2
2D60 B2
2D61 B1
2D62 B2
2M16 C1
2M18 C1
3D46 B1
3D47 B2
3D60 B1
3D61 B2
5D10 A1
5D11 A2
5D12 B1
5D13 B2
5D14 A1
5D15 A2
5D18 B1
5D19 B2
5M03 C1
7D18 B1
7D23 B2

Layout Audio Panel (Bottom Side)

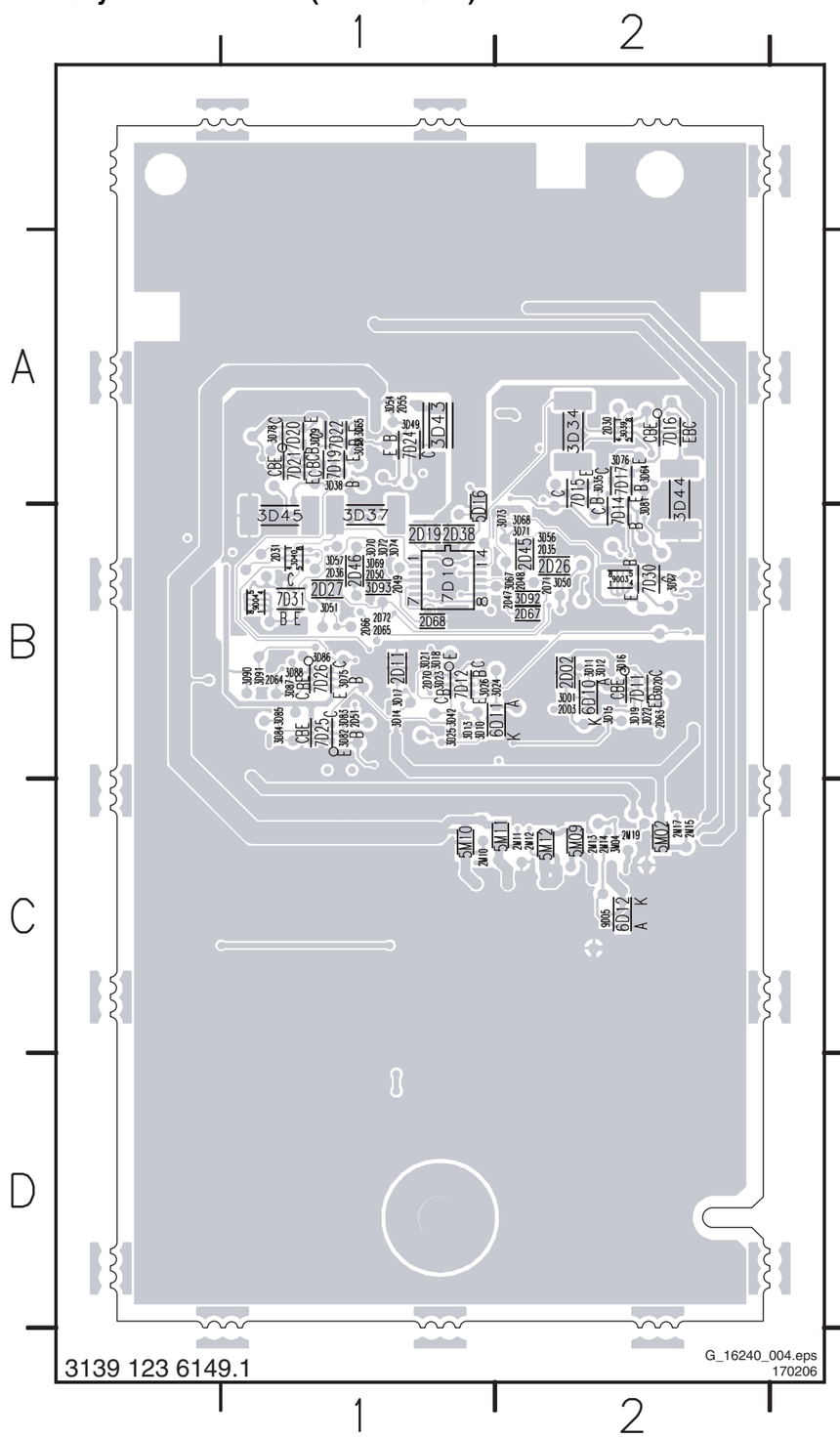

2D02 B2
2D03 B2
2D11 B1
2D19 B1
2D26 B2
2D27 B1
2D30 A2
2D31 B1
2D35 B2
2D36 B1
2D38 B1
2D45 B2
2D46 B1
2D47 B2
2D48 B2
2D49 B1
2D50 B1
2D51 B1
2D55 A1
2D63 B2
2D64 B1
2D65 B1
2D66 B1
2D67 B2
2D68 B1
2D70 B1
2D71 B2
2D72 B1
2M10 C1
2M11 C2
2M12 C2
2M13 C2
2M14 C2
2M15 C2
2M17 C2
2M19 C2
3D01 B2
3D10 B1
3D11 B2
3D12 B2
3D13 B1
3D14 B1
3D15 B2
3D16 B2
3D17 B1
3D18 B1
3D19 B2
3D20 B2
3D21 B1
3D22 B2
3D23 B1
3D24 B2
3D25 B1
3D26 B1
3D34 A2
3D35 A2
3D37 B1
3D38 A1
3D39 A2
3D40 B1
3D42 B1
3D43 A1
3D44 A2
3D45 B1
3D49 A1
3D50 B2
3D51 B1
3D54 A1
3D56 B2
3D57 B1
3D58 A1
3D64 A2
3D65 A1
3D67 B2
3D68 B2
3D69 B1
3D70 B1
3D71 B2
3D72 B1
3D73 B2
3D74 B1
3D75 B1
3D76 A2
3D77 B2
3D78 A1
3D79 A1
3D81 B2
3D82 B1
3D83 B1
3D84 B1
3D85 B1
3D86 B1
3D87 B1
3D88 B1
3D90 B1
3D91 B1
3D92 B2
3D93 B1
3M04 C2
5D16 B1
5M02 C2
5M09 C2
5M10 C1
5M11 C2
5M12 C2
6D10 B2
6D11 B2
6D12 C2
7D10 B1
7D11 B2
7D12 B1
7D14 B2
7D15 A2
7D16 A2
7D17 A2
7D19 A1
7D20 A1
7D21 A1
7D22 A1
7D24 A1
7D25 B1
7D26 B1
7D30 B2
7D31 B1
9D03 B2
9D04 B1
9D05 C2

Side I/O Panel

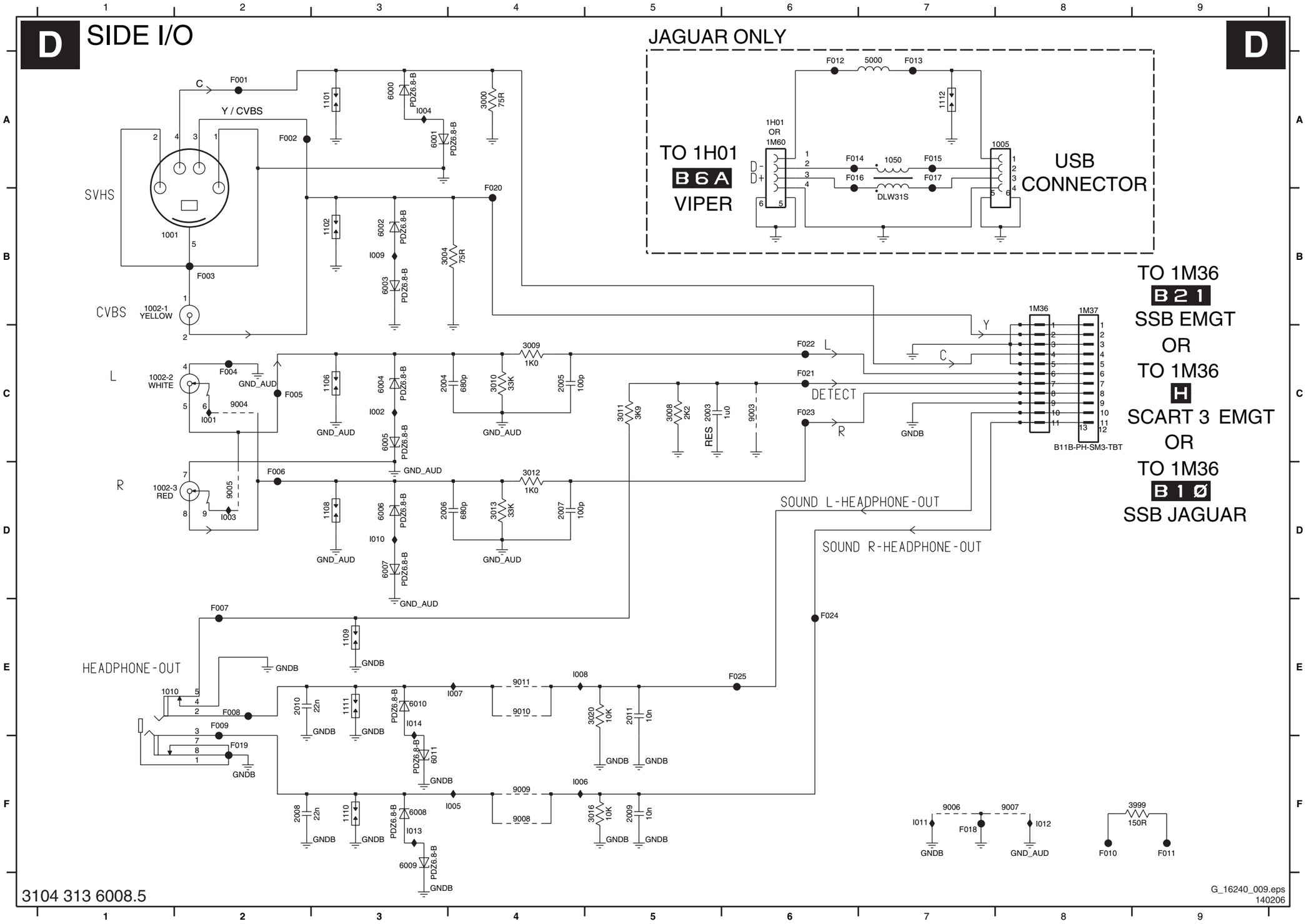

1001 B2	F002 A2
1002-1 B1	F003 B2
1002-2 C1	F004 C2
1002-3 D1	F005 C2
1005 A8	F006 D2
1010 E1	F007 E2
1050 A7	F008 E2
1101 A3	F009 E2
1102 B3	F010 F8
1106 C3	F011 F9
1108 D3	F012 A6
1109 E3	F013 A7
1110 F3	F014 A6
1111 E3	F015 A7
1112 A7	F016 A6
1H01 A6	F017 A7
1M36 B8	F018 F7
1M37 B8	F019 F2
2003 C5	F020 B4
2004 C3	F021 C6
2005 C4	F022 C6
2006 D3	F023 C6
2007 D4	F024 E6
2008 F2	F025 E6
2009 F5	I001 C2
2010 E2	I002 C3
2011 E5	I003 D2
3000 A4	I004 A3
3004 B3	I005 F4
3008 C5	I006 F4
3009 C4	I007 E4
3010 C4	I008 E4
3011 C5	I009 B3
3012 D4	I010 D3
3013 D4	I011 F7
3016 F5	I012 F8
3020 E5	I013 F3
3999 F9	I014 E3
5000 A7	
6000 A3	
6001 A3	
6002 B3	
6003 B3	
6004 C3	
6005 C3	
6006 D3	
6007 D3	
6008 F3	
6009 F3	
6010 E3	
6011 F3	
9003 C6	
9004 C2	
9005 D2	
9006 F7	
9007 F8	
9008 F4	
9009 F4	
9010 E4	
9011 E4	
F001 A2	

Layout Side I/O Panel (Top Side)

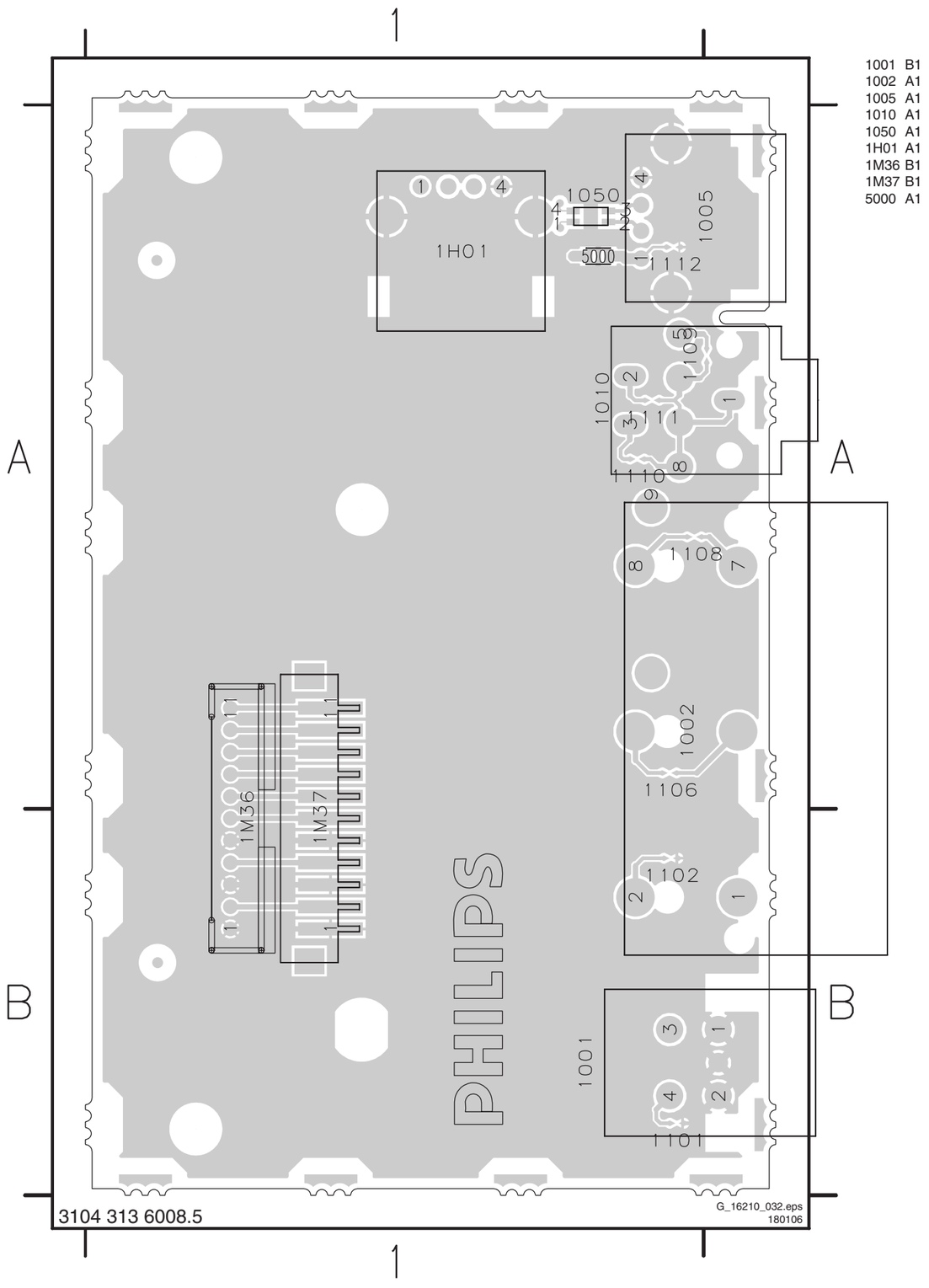

Layout Side I/O Panel (Bottom Side)

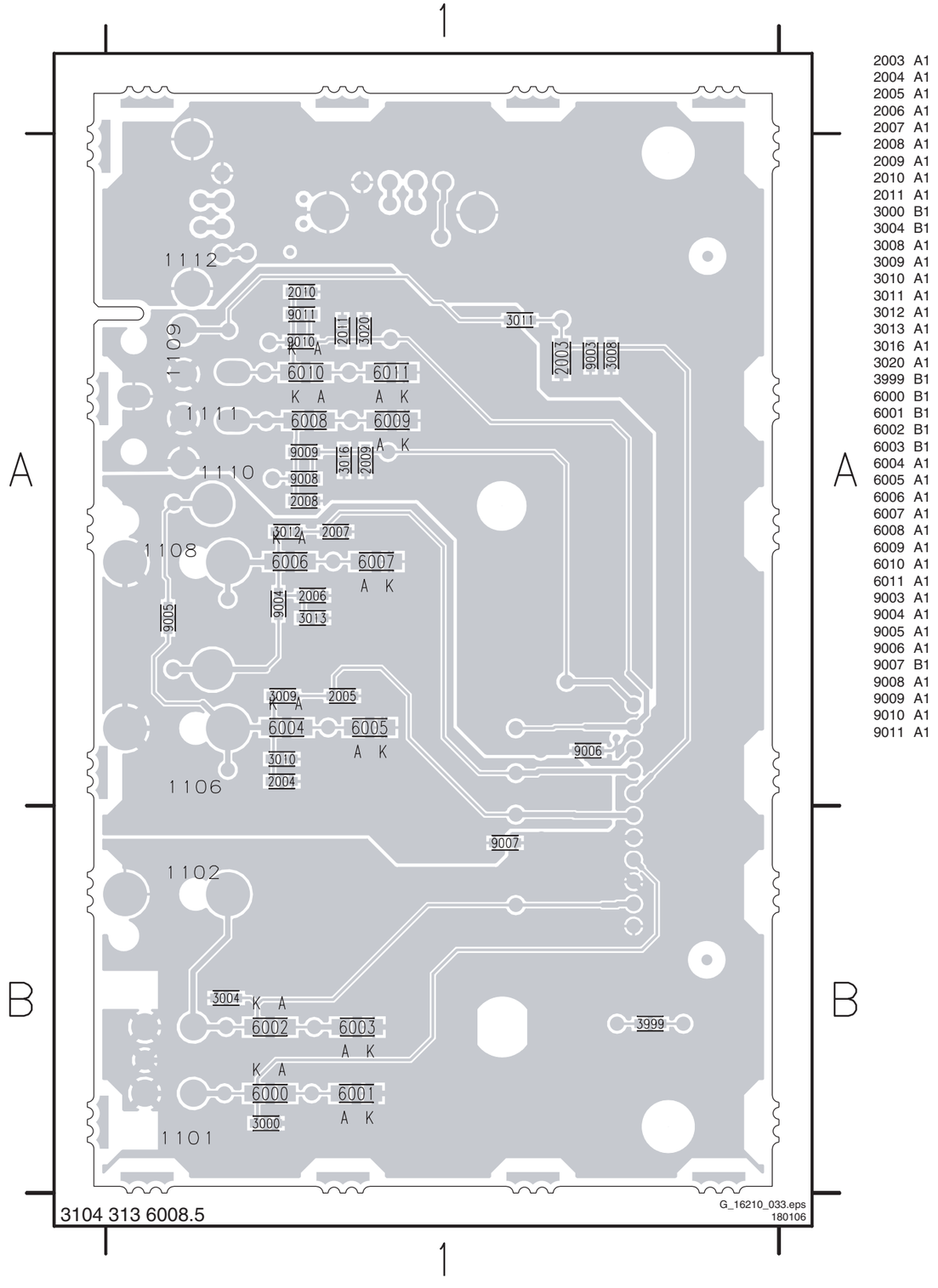

Keyboard Control Board

1701 A1	1704 A2	1M01 A4	3004 C1	3007 C1	3999 C4	9003 C2	F003 C4	I007 C1	I010 C2	I102 B1	I105 B3
1702 A1	1705 A1	3002 C2	3005 C1	3008 C1	9001 C3	F001 A4	F004 C4	I008 C1	I100 B1	I103 B2	
1703 A2	1706 A3	3003 C2	3006 C1	3009 C2	9002 C1	F002 A4	I006 C1	I009 C2	I101 B1	I104 B2	

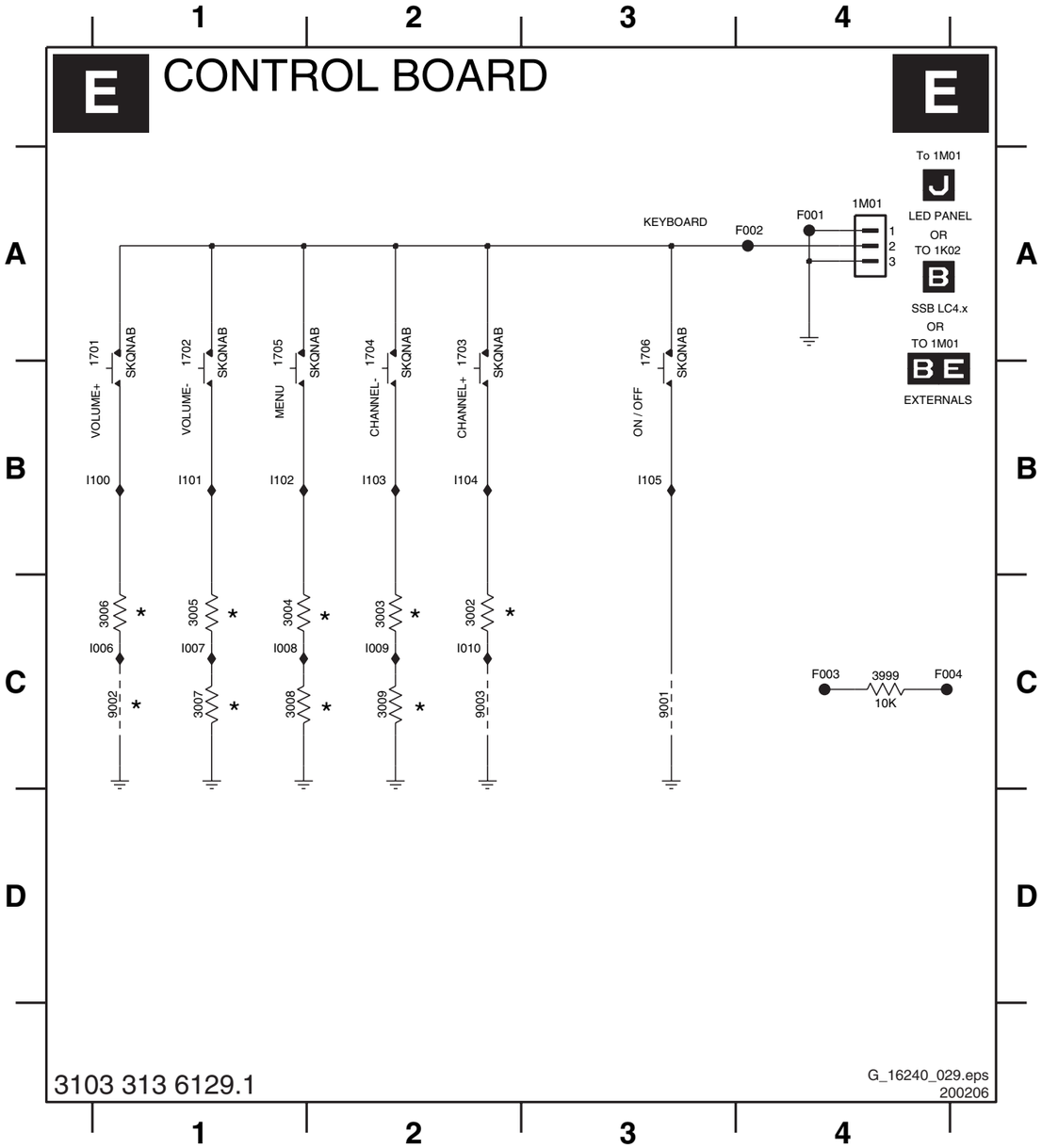

Layout Keyboard Control Board (37”) (Top Side)

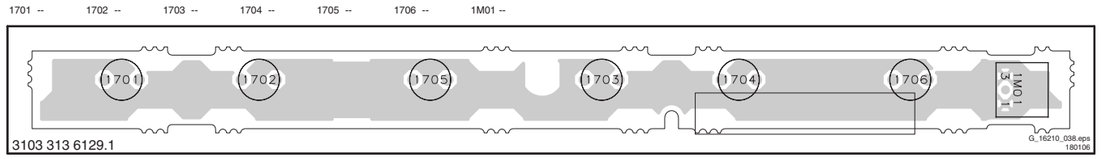

Layout Keyboard Control Board (37”) (Bottom Side)

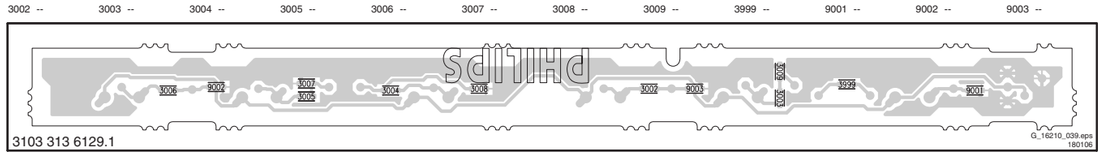

Front IR / LED Panel

LED PANEL

TO 1M20 B SSB JL2.x / LC4.x OR TO 1M20 B E EXTERNALS FTx2.x / Bx2.x

TO 1M01 E CONTROL BOARD

TO 0345 E TOP CONTROL

"BLUE" or "GREEN"

"RED"

"LED DIMMING"

"IR RECEIVER"

"LIGHT SENSOR"

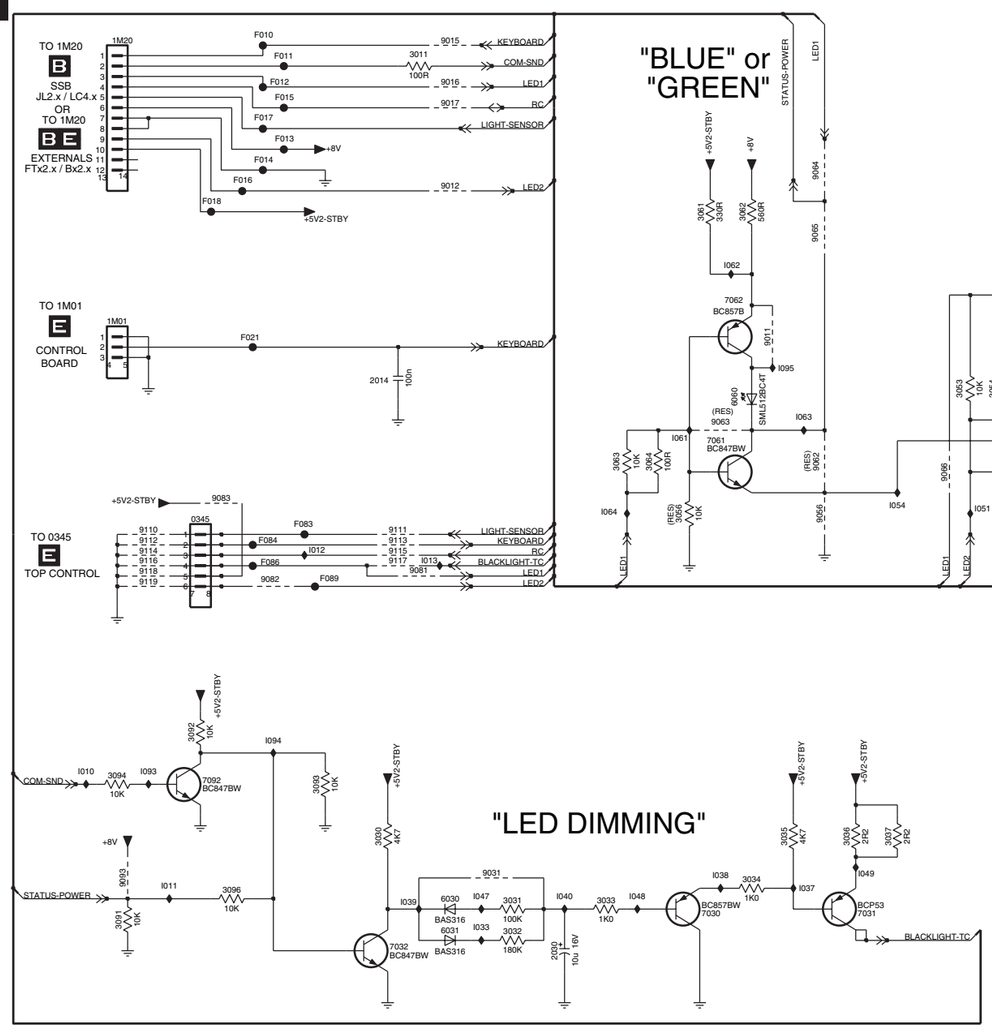

G_162140_010.eps
140206

0001 A10
0002 A11
0345 D2
1040 F9
1M01 C2
1M20 A2
2014 C4
2030 G5
2040 F9
2070 F12
2071 G12
3011 A4
3030 G4
3031 G5
3032 G5
3033 G5
3034 G6
3035 G6
3036 G7
3037 G7
3040 F9
3041 G9
3042 F9
3051 B8
3052 B8
3053 C8
3054 C8
3055 C8
3056 D6
3061 B6
3062 B6
3063 D5
3064 D5
3070 G11
3071 F12
3072 G13
3073 G13
3074 F13
3075 F14
3076 G14
3077 G12
3078 G11
3091 G2
3092 F2
3093 F3
3094 F2
3096 G3
3999 B12
6030 G4
6031 G4
6051 C8
6060 C6
6070 G11
7030 G6
7031 G7
7032 G4
7051 C8
7052 D8
7061 D6
7062 C6
7070-1 F12
7070-2 G13
7092 F2
9011 C6
9012 B4
9015 A4
9016 A4
9017 A4
9031 G4
9040 G9
9041 F9
9042 G9
9043 F9
9052 C9
9053 C8
9054 D9
9056 D7
9062 D7
9063 D6
9064 B7
9065 B7
9066 D7
9070 F11
9071 F11
9072 G11
9081 E4
9082 E3
9083 D3
9093 G2
9110 D2
9111 D4
9112 D2
9113 D4
9114 E2
9115 E4
9116 E2
9117 E4
9118 E2
9119 E2
9120 B10
9121 B11
9122 F11
F010 A3
F011 A3
F012 A3
F013 B3
F014 B3
F015 A3
F016 B3
F017 B3
F018 B2
F021 C3
F038 B12
F039 B12
F083 D3
F084 D3
F086 E3
F089 E3
I010 F2
I011 G2
I012 E3
I013 E4
I026 F12
I033 G4
I037 G7
I038 G6
I039 G4
I040 G5
I041 G9
I042 G9
I043 F9
I044 F9
I045 F9
I046 E9
I047 G4
I048 G5
I049 G7
I051 D8
I052 C8
I053 B9
I054 D7
I061 D6
I062 C6
I063 D7
I064 D5
I065 C9
I071 F11
I072 F14
I073 G12
I074 G12
I075 F12
I076 F13
I093 F2
I094 F3
I095 C6

Layout Front IR / LED Panel (Top Side)

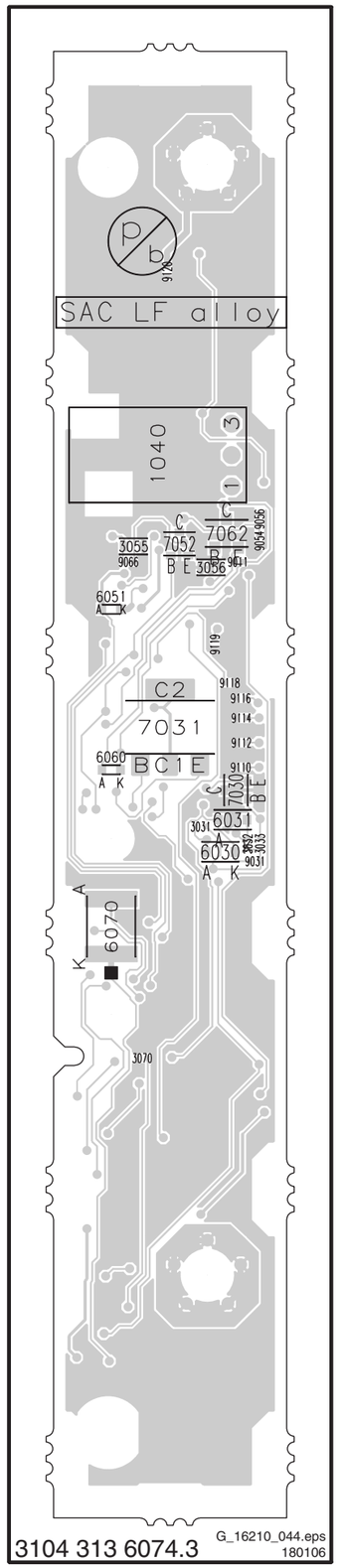

1040 --
3031 --
3032 --
3033 --
3055 --
3056 --
3070 --
6030 --
6031 --
6051 --
6060 --
6070 --
7030 --
7031 --
7052 --
7062 --
9011 --
9031 --
9054 --
9056 --
9066 --
9110 --
9112 --
9114 --
9116 --
9118 --
9119 --
9120 --

3104 313 6074.3 G_16210_044.eps 180106

Layout Front IR / LED Panel (Bottom Side)

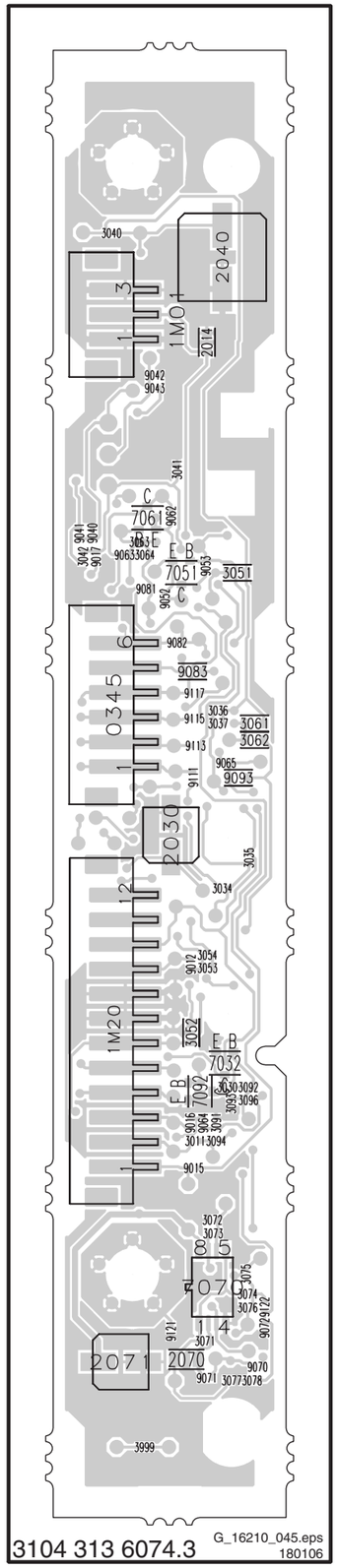

0345 --
1M01 --
1M20 --
2014 --
2030 --
2040 --
2070 --
2071 --
3011 --
3030 --
3034 --
3035 --
3036 --
3037 --
3040 --
3041 --
3042 --
3051 --
3052 --
3053 --
3054 --
3061 --
3062 --
3063 --
3064 --
3071 --
3072 --
3073 --
3074 --
3075 --
3076 --
3077 --
3078 --
3091 --
3092 --
3093 --
3094 --
3096 --
3999 --
7032 --
7051 --
7061 --
7070 --
7092 --
9012 --
9015 --
9016 --
9017 --
9040 --
9041 --
9042 --
9043 --
9052 --
9053 --
9062 --
9063 --
9064 --
9065 --
9070 --
9071 --
9072 --
9081 --
9082 --
9083 --
9093 --
9111 --
9113 --
9115 --
9117 --
9121 --
9122 --

3104 313 6074.3 G_16210_045.eps 180106

OTC Flash (For 1000pg TXT)

T OTC-FLASH (FOR 1000pg TXT)

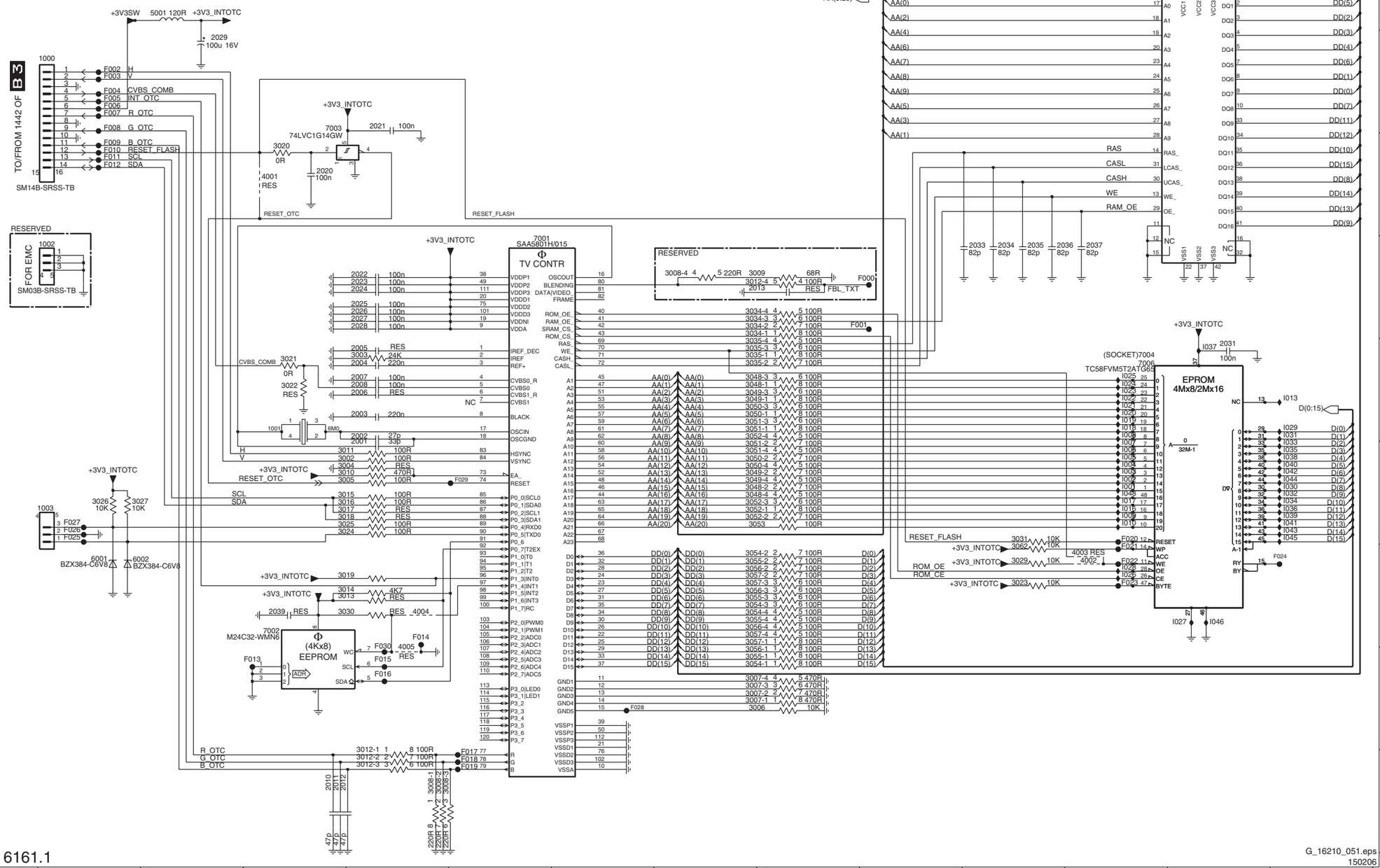

3139 123 6161.1

G_16210_051.eps
150206

1000 B2	3056-1 H9
1001 E4	3056-2 G9
1002 D2	3056-3 G9
1003 F2	3056-4 G9
2001 E5	3057-1 G9
2002 E5	3057-2 G9
2003 E5	3057-3 G9
2004 E5	3057-4 G9
2005 E5	3062 G11
2006 E5	4001 C4
2007 E5	4002 G12
2008 E5	4003 G12
2010 I4	4004 G5
2011 I4	4005 H5
2012 I4	5001 A3
2013 D9	6001 G2
2019 A13	6002 G3
2020 C4	7001 D6
2021 B5	7002 G4
2022 D5	7003 B4
2023 D5	7004 E12
2024 D5	7006 E12
2025 D5	7007 A13
2026 D5	F000 D10
2027 D5	F001 D9
2028 D5	F002 B2
2029 B3	F003 B2
2031 E13	F004 B2
2033 D11	F005 B2
2034 D11	F006 B2
2035 D11	F007 B2
2036 D12	F008 B2
2037 D12	F009 C2
2038 A13	F010 C2
2039 G4	F011 C2
3002 F5	F012 C2
3003 E5	F013 H4
3004 F5	F014 G5
3005 F5	F015 H5
3006 H9	F016 H5
3007-1 H9	F017 I6
3007-2 H9	F018 I6
3007-3 H9	F019 I6
3007-4 H9	F020 F12
3008-1 I5	F021 G12
3008-2 I5	F022 G12
3008-3 I5	F023 G12
3008-4 D8	F024 G14
3009 D9	F025 F2
3010 F5	F026 F2
3011 F5	F027 F2
3012-1 H5	F028 H7
3012-2 I5	F029 F6
3012-3 I5	F030 H5
3012-4 D9	I001 F12
3013 G5	I002 F12
3014 G5	I003 F12
3015 F5	I004 F12
3016 F5	I005 F12
3017 F5	I006 F12
3018 F5	I007 F12
3019 G5	I008 E12
3020 C4	I009 F12
3021 E4	I010 F12
3022 E4	I013 E14
3023 G11	I016 F12
3024 F5	I017 F12
3025 F5	I018 E12
3026 F2	I019 E12
3027 F2	I020 E12
3029 G11	I021 E12
3030 G5	I022 E12
3031 F11	I023 E12
3034-1 D9	I024 E12
3034-2 D9	I025 E12
3034-3 D9	I026 G12
3034-4 D9	I027 G13
3035-1 E9	I028 G12
3035-2 E9	I029 E14
3035-3 E9	I030 F14
3035-4 E9	I031 E14
3048-1 E9	I032 F14
3048-2 F9	I033 F14
3048-3 E9	I034 F14
3048-4 F9	I035 F14
3049-1 E9	I036 F14
3049-2 F9	I037 E13
3049-3 E9	I038 F14
3049-4 F9	I039 F14
3050-1 E9	I040 F14
3050-2 F9	I041 F14
3050-3 E9	I042 F14
3050-4 F9	I043 F14
3051-1 E9	I044 F14
3051-2 F9	I045 F14
3051-3 E9	I046 G13
3051-4 F9	I048 F12
3052-1 F9	
3052-2 F9	
3052-3 F9	
3052-4 E9	
3053 F9	
3054-1 H9	
3054-2 G9	
3054-3 G9	
3054-4 G9	
3055-1 H9	
3055-2 G9	
3055-3 G9	
3055-4 G9	

Layout OTC Flash (For 1000pg TXT) (Top View)

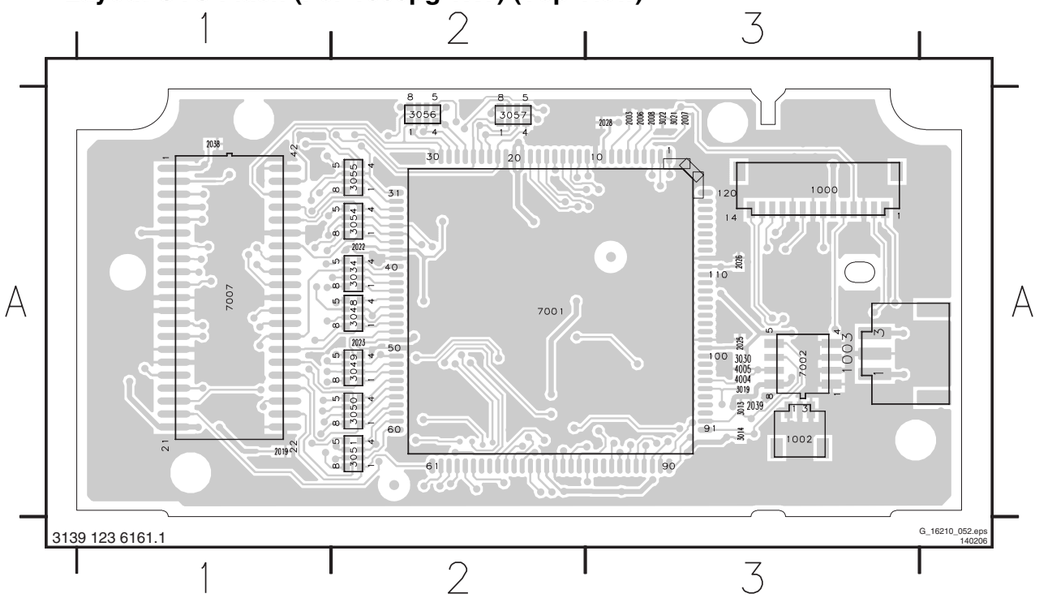

1000 A3
1002 A3
1003 A3
2003 A3
2006 A3
2007 A3
2008 A3
2019 A1
2022 A2
2023 A2
2025 A3
2026 A3
2028 A3
2038 A1
2039 A3
3013 A3
3014 A3
3019 A3
3021 A3
3022 A3
3030 A3
3034 A2
3048 A2
3049 A2
3050 A2
3051 A2
3054 A2
3055 A2
3056 A2
3057 A2
4004 A3
4005 A3
7001 A2
7002 A3
7007 A1

Layout OTC Flash (For 1000pg TXT) (Bottom View)

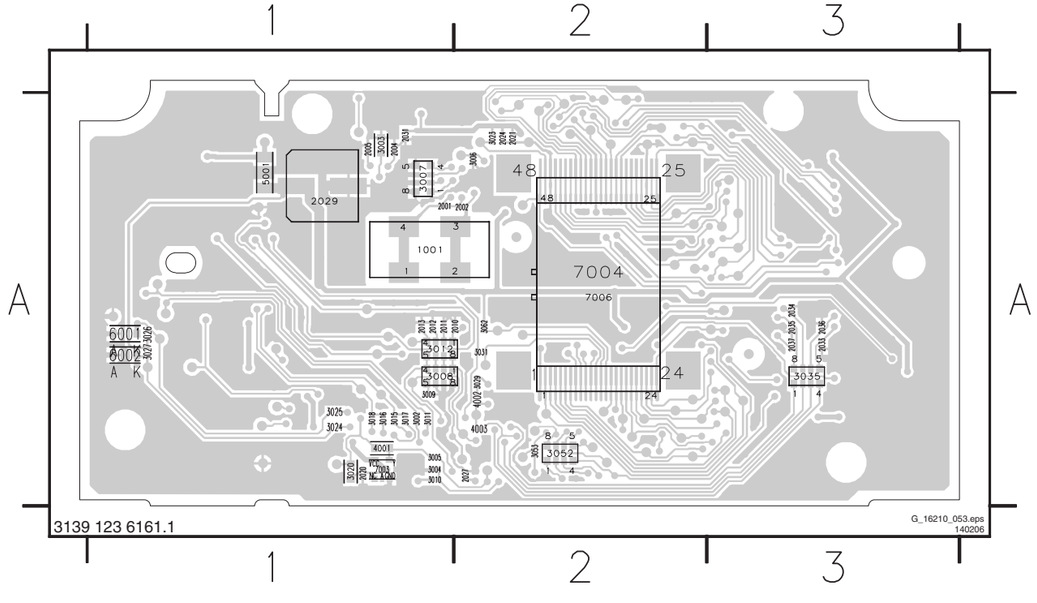

1001 A1
2001 A1
2002 A2
2004 A1
2005 A1
2010 A2
2011 A1
2012 A1
2013 A1
2020 A1
2021 A2
2024 A2
2027 A2
2029 A1
2031 A1
2033 A3
2034 A3
2035 A3
2036 A3
2037 A3
3002 A1
3003 A1
3004 A1
3005 A1
3006 A2
3007 A1
3008 A1
3009 A1
3010 A1
3011 A1
3012 A1
3015 A1
3016 A1
3017 A1
3018 A1
3020 A1
3023 A2
3024 A1
3025 A1
3026 A1
3027 A1
3029 A2
3031 A2
3035 A3
3052 A2
3053 A2
3062 A2
4001 A1
4002 A2
4003 A2
5001 A1
6001 A1
6002 A1
7003 A1
7004 A2
7006 A2

Personal Notes:

E_06532_012.eps
131004

Personal Notes:

E_06532_013.eps
131004

8. Alignments

Index of this chapter:
8.1 General Alignment Conditions
8.2 Hardware Alignments
8.3 Software Alignments

Note: Figures below can deviate slightly from the actual situation, due to the different set executions.

General: The Service Default Mode (SDM) and Service Alignment Mode (SAM) are described in chapter 5. Menu navigation is done with the Cursor Up, Down, Left or Right keys of the remote control transmitter.

8.1 General Alignment Conditions

Perform all electrical adjustments under the following conditions:
Mains voltage and frequency: 220-240 V / 50/60 Hz.
Allow the set to warm up for approximately 10 minutes.
Test probe: Ri > 10 MΩ; Ci < 2.5 pF.

8.2 Hardware Alignments

There are no hardware alignments foreseen for these models.

8.3 Software Alignments

With the software alignments of the Service Alignment Mode (SAM) various settings, like white tone and tuner (IF) can be aligned.
To store the data: use the RC button Menu to switch to the main menu and next, switch to ‘Stand-by’ mode.

8.3.1 SAM Menu

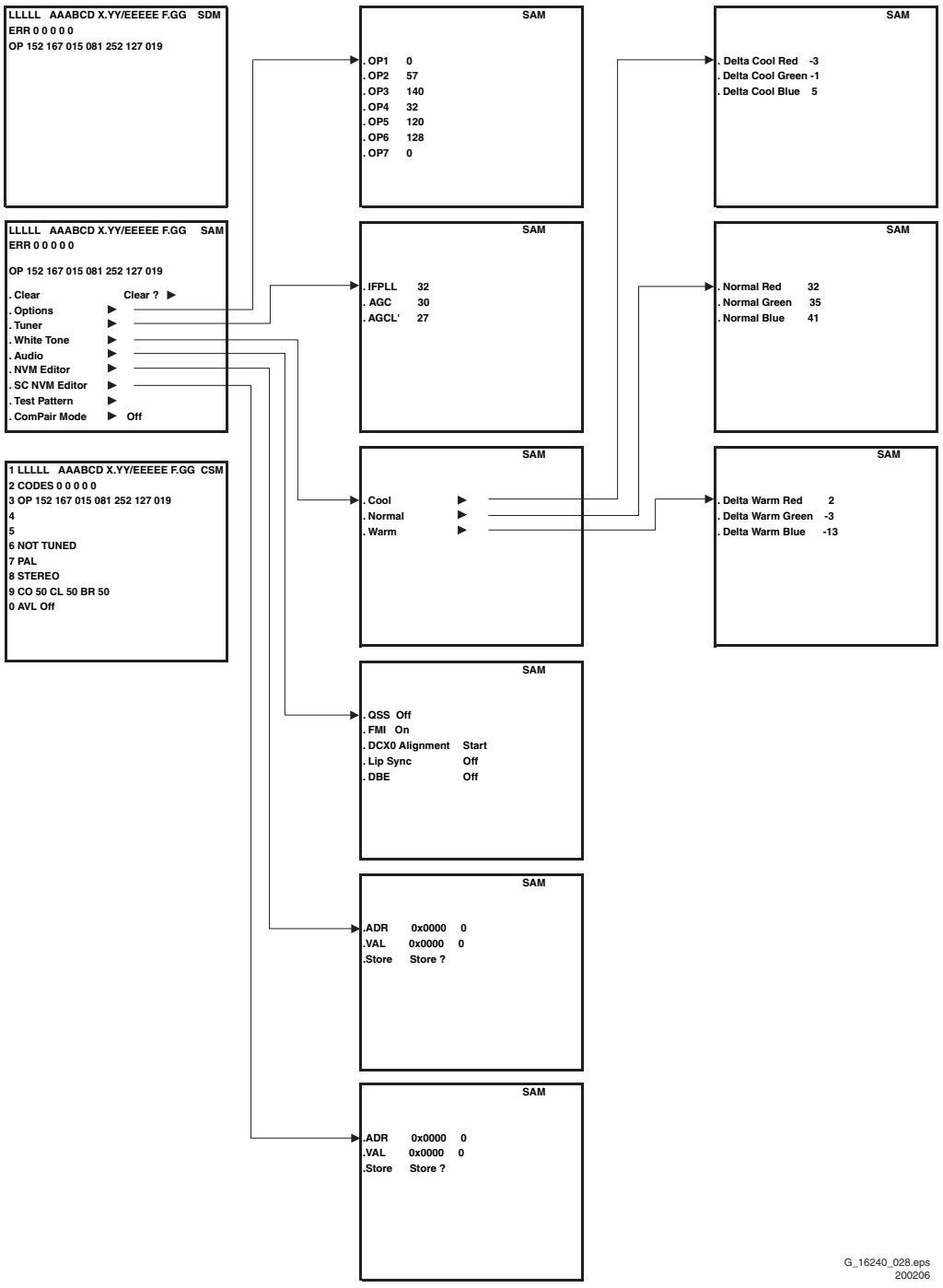

Figure 8-1 Overview SAM menu (the values are indicative)

8.3.2 Tuner Adjustment

AGC (RF AGC Take Over Point)

- Activate the SAM menu.
- Go to the sub-menu Tuner.
- Select the AGC sub-menu.
- Adjust the AGC value to AGC = 27.
- Adjust the AGC L' value to AGC L' = 27 (Europe only).
- Adjust the IFPLL value to IFPLL = 32 (Europe only).
- Switch the set to standby to store the data.

8.3.3 DCXO (Digital Xtal Oscillator) Alignment (for NICAM sets only)

- Input a Colour bar signal with a colour subcarrier frequency of 4.43 MHz on SCART1 or SCART2.
- Select as a signal source EXT1 or AV1.
- Go to the SAM menu and select Audio.
- Activate DCXO Alignment and wait until this process has finished (DONE).
- Check if the NICAM audio reception is OK, if not: repeat the procedure.
- Switch the set to standby to store the data.

8.3.4 ADC Gain and Grey Scale Alignment

The table below shows a number of NVM settings used for each model of TV set. Be sure to use the correct editor in the SAM menu (NVM Editor or SC NVM Editor), because the first one is used for the Hercules NVM, and the second one for the SCALER (SC) part of the TV set. For further important NVM settings, see also the other NVM tables elsewhere in this manual.

Caution:

- **Do not change the NVM settings without understanding the function of each setting, because incorrect NVM settings may seriously hamper the correct functioning of the TV set!**
- **Do not change the Scaler NVM settings, as this will hamper the DVI functionality of the TV set!**
- Always note down the existing NVM settings, before changing the settings. This will enable you to return to the original settings, if the new settings turn out to be incorrect.

Table 8-1 ADC gain and grey scale alignment

SDTV ADC Gain settings: Use the NVM Editor in SAM to set these values in the Hercules NVM		
Setting	**Hercules NVM Address (decimal value)**	**42PF3321/10 42PF5321/ 10/12 (42PF5411/10 TBD) 42PF7321/10/12**
NVM_ADC_GAIN_R	006	135
NVM_ADC_GAIN_G	007	185
NVM_ADC_GAIN_B	008	165

SDTV Greyscale settings: Use the SC NVM Editor in SAM to set these values in the Scaler NVM		
Setting	**Scaler NVM Address (decimal value)**	**42PF3321/10 42PF5321/ 10/12 (42PF5411/10 TBD) 42PF7321/10/12**
ADC_RED_OFFSET2	338	070
ADC_GRN_OFFSET2	339	070
ADC_BLU_OFFSET2	340	070
ADC_RED_GAIN	341	150
ADC_GRN_GAIN	343	150
ADC_BLU_GAIN	345	150
PC Greyscale settings		
Setting	**Scaler NVM Address (decimal value)**	42PF3321/10 42PF5321/ 10/12 (42PF5411/10 TBD) 42PF7321/10/12
ADC_RED_OFFSET2	325	070
ADC_GRN_OFFSET2	326	070
ADC_BLU_OFFSET2	327	070
ADC_RED_GAIN	328	240
ADC_GRN_GAIN	330	240
ADC_BLU_GAIN	332	240
HD Greyscale settings		
Setting	**Scaler NVM Address (decimal value)**	42PF3321/10 42PF5321/ 10/12 (42PF5411/10 TBD) 42PF7321/10/12
ADC_RED_OFFSET2	351	064
ADC_GRN_OFFSET2	352	075
ADC_BLU_OFFSET2	353	064
ADC_RED_GAIN	354	180
ADC_GRN_GAIN	356	180
ADC_BLU_GAIN	358	180

8.3.5 Panel Size Settings

The table below shows the NVM settings for panel selection, based on panel size and manufacturer. Use the SC NVM editor in the SAM menu to change the panel code at decimal address 320.

Caution:

- **Make sure to choose the right panel, because incorrect NVM settings may seriously hamper the correct functioning of the TV set!**
- Always note down the existing NVM settings, before changing the settings. This will enable you to return to the original settings, if the new settings turn out to be incorrect.

Table 8-2 Panel size settings

Option table for panel size settings		
Manufacturer	**Size (inch)**	**Panel code (hex)**
SDI-SD	42	02
LG-SD	42	03
SDI-HD	42	04
FHP-HP	42	05

8.3.6 Sound

- For NICAM sets: see paragraph 8.3.3.
- For other sets: No adjustments needed for sound.

8.3.7 Options

Options OP1...OP7 in the SAM menu can be used for quickly restoring 64 features or settings of the HERCULES part of the TV set to their original default factory values (8 groups of 8 features/settings each). When the decimal value of one option byte OP1...OP7 is changed (see the first table below) then a group of 8 bits, representing 8 HERCULES options or features, is changed as well (see the second table below for a detailed description of the features or settings that are changed).
The second table shows which option byte (OP1...OP7) represents which group of 8 option bits. Each bit (0...7) switches a particular HERCULES feature or setting ON or OFF, depending on its value (1 or 0).
It is also possible to change the features or settings mentioned in the second table directly at bit level, by means of the NVM Editor in the SAM menu. In the NVM Editor, first the correct NVM address (ADR) has to be entered, then the correct value (VAL, 1 or 0) for each bit (see second table), and finally the settings have to be stored (STORE). For quickly restoring the HERCULES part of the TV set to its original factory settings, however, it is more convenient to simply enter the default factory settings OP1...OP7 that are given in the first table below. How to do this, is described in the next paragraph.

How to Change an Option Byte
As has been explained above, an Option byte (OP) represents a number of different HERCULES options. Changing these bytes directly makes it possible to set all HERCULES options very fast. All options are controlled via seven option bytes. Select the option byte (OP1.. OP7) with the Menu Up/ Down keys, and enter the new (decimal) value. For the correct Factory Default settings, see the first table below. For more detailed information, see the second table.

Leaving the Option submenu saves the changes in the Option Byte settings. Some changes will only take effect after the set has been switched “off” and “on” with the AC power switch (cold start).

Table 8-3 Option codes OP1...OP7

Option table for quickly restoring the HERCULES to its Factory Default settings			
Model number	**42PF3321/10 42PF5321/10/12**	**42PF5411/10 (TBD)**	**42PF7321/10/12**
OP1	152	152	152
OP2	165	165	165
OP3	47	47	111
OP4	113	113	241
OP5	252	252	252
OP6	27	27	27
OP7	19	19	19
Options (can be changed only via the SAM menu)	Total decimal value for each option per model number		

How to Change Options at Bit Level
If you wish to know which features or settings of the HERCULES are changed via OP1...OP7, or if you want to change each option or feature bit by bit, use the more detailed table below.
Note: the table below contains only part of the NVM settings that can be changed. A second range of settings and features can be found in Chapter 5 of this manual, in table NVM Default values. The settings mentioned there can only be changed via the NVM editor. For further settings, see also the table “ADC Gain and Grey scale alignment” elsewhere in this manual.

Table 8-4 Option codes in detail, at bit level

Option byte & bit table for restoring the TV set to its original Factory Default settings via the NVM Editor in the SAM menu				
Model number		**42PF3321/10 42PF5321/10/12**	**42PF5411/10 (TBD)**	**42PF7321/10/12**
OP1	**Description of feature/option to be switched ON or OFF**			
bit 7 (msb)	OP_PHILIPS_TUNER	1	1	1
bit 6	OP_FM_RADIO	0	0	0
bit 5	OP_LNA	0	0	0
bit 4	OP_ATS // for EU	1	1	1
bit 3	OP_ACI	1	1	1
bit 2	OP_UK_PNP	0	0	0
bit 1	OP_VIRGIN_MODE	0	0	0
bit 0 (lsb)	OP_CHINA	0	0	0
	Total DEC Value	152	152	152
	Total HEX Value	98	98	98
OP2				
bit 7 (msb)	OP_HDMI-X2	1	1	1
bit 6	OP_IBEX (for DVB)	0	0	0
bit 5	OP_CHANNEL_NAMING	1	1	1
bit 4	OP_LTI (Lum Transcient Improvmt)	0	0	0
bit 3	OP_TILT	0	0	0
bit 2	OP_FINE_TUNING	1	1	1
bit 1	OP_BACKLIGHT_DIMMING (for Malibu only)	0	0	0
bit 0 (lsb)	OP_HUE	1	1	1
	Total DEC Value	165	165	165
	Total HEX Value	A5	A5	A5
OP3				
bit 7 (msb)	OP_EW_FUNCTION	0	0	0
bit 6	OP_PIXEL_PLUS (for Option A)	0	0	1
bit 5	OP_SCL_RECOVERY	1	1	1
bit 4	OP_SPLITTER // temp	0	0	0
bit 3	OP_VIRTUAL_DOLBY	1	1	1
bit 2	OP_WIDE_SCREEN	1	1	1
bit 1	OP_WSSB	1	1	1
bit 0 (lsb)	OP_OP_ME5 // OP_ME5 - 5/6 local buttons implementation	1	1	1
	Total DEC Value	47	47	111
	Total HEX Value	2F	2F	6F
OP4				
bit 7 (msb)	OP_LIP_SYNC (for PDP only)	0	0	1
bit 6	OP_HD	1	1	1
bit 5	OP_1000P_TEXT	1	1	1
bit 4	OP_DELTA_VOLUME	1	1	1
bit 3	OP_TAIWAN_KOREA	0	0	0
bit 2	OP_VOLUME_LIMITER	0	0	0
bit 1	OP_STEREO_DBX	0	0	0
bit 0 (lsb)	OP_STEREO_NICAM_2CS	1	1	1
	Total DEC Value	113	113	241
	Total HEX Value	71	71	F1
OP5				
bit 7 (msb)	OP_AV1	1	1	1
bit 6	OP_AV2	1	1	1
bit 5	OP_AV3	1	1	1
bit 4	OP_CVI	1	1	1
bit 3	OP_SVHS2	1	1	1
bit 2	OP_SVHS3	1	1	1
bit 1	OP_HOTEL_MODE	0	0	0
bit 0 (lsb)	OP_SIMPLY_FACTORY=OP_BTSC_AVSTEREO	0	0	0
	Total DEC Value	252	252	252
	Total HEX Value	FC	FC	FC
OP6				
bit 7 (msb)	OP_PERSONAL_ZAPPING	0	0	0
bit 6	OP_SMART_SURF	0	0	0
bit 5	OP_FMTRAP	0	0	0
bit 4	OP_COMBFILTER	1	1	1
bit 3	OP_ACTIVE_CONTROL	1	1	1
bit 2	OP_VIDEO_TEXT	0	0	0
bit 1	OP_LIGHT_SENSOR	1	1	1
bit 0 (lsb)	OP_TWIN_TEXT	1	1	1
	Total DEC Value	27	27	27
	Total HEX Value	1B	1B	1B
OP7				
bit 7 (msb)	OP_TIME_WIN1	0	0	0
bit 6	OP_DVB_USB = OP_MALAY	0	0	0

Option byte & bit table for restoring the TV set to its original Factory Default settings via the NVM Editor in the SAM menu				
Model number		**42PF3321/10 42PF5321/10/12**	**42PF5411/10 (TBD)**	**42PF7321/10/12**
bit 5	OP_AMBILIGHT	0	0	0
bit 4	OP_COLUMBUS	1	1	1
bit 3	OP_DUMMY6	0	0	0
bit 2	OP_DUMMY7	0	0	0
bit 1	OP_WEST_EU	1	1	1
bit 0 (lsb)	OP_MULTI_STANDARD_EUR	1	1	1
	Total DEC Value	19	19	19
	Total HEX Value	13	13	13

9. Circuit Descriptions, Abbreviation List, and IC Data Sheets

Index of this chapter:

9.1 Introduction
9.2 Block Diagram
9.3 Power Supply Unit
9.4 Abbreviation List
9.5 IC Data Sheets

9.1 Introduction

The LC4.41 chassis is a global chassis for the year 2006. It is a successor of the LC4.3 chassis and covers a screen size of 42 inch (in 16:9 ratio). It has a new styling, called ME5FL. There are two different picture qualities available, depending on the model: Pixel Plus in the 42PF7321/10 and /12 models, and Digital Crystal Clear in the 42PF5xx1/10 and /12 models. The block diagram below (Figure “Block diagram”) shows the Pixel Plus architecture; the architectures of the Digital Crystal Clear models are shown in the block diagram in the Figure “Block diagram of the internal building blocks“.

The architecture consists of a TV and Scaler panel, I/O panel, Side I/O and Local Keyboard panel and Power Supply panel. The functions for video/audio processing, microprocessor (P), and CC/Teletext (TXT) decoder are all combined in one IC (TDA150xx, item 7217), the so-called third generation Ultimate One Chip (UOC-III) or “Hercules”. This chip has the following features:

- Control, small signal, mono/stereo, and extensive Audio/ Video switching in one IC.
- Upgrade with digital sound & video processing.
- Alignment free IF, including SECAM-L/L1 and AM.
- FM sound 4.5/5.5/6.0/6.5, no traps/bandpass filters.
- Full multi-standard colour decoder.
- One Xtal reference for all functions (microprocessor, RCP, TXT/CC, RDS, colour decoder, and stereo sound processor).

9.2 Block Diagram

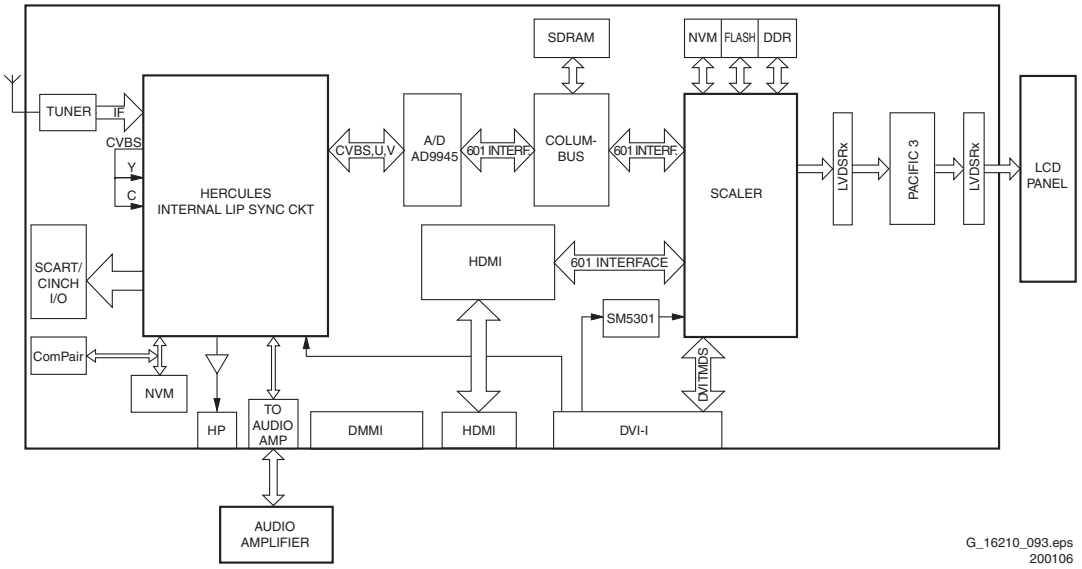

Figure 9-1 Block Diagram

The function is basically the same as in the LC4.3E AA, with the following differences:

- the model range only contains models with Digital Crystal Clear or Pixel Plus;
- Pixel Plus is performed by a new IC, called Pacific 3.

The Pacific 3 IC, which is present in Pixel Plus models, provides additional sharpening, and contrast and colour enhancements to the picture. For a general outline, see the table and the block diagrams below, in which the architectures of the two different models are given, together with their electronic building blocks.

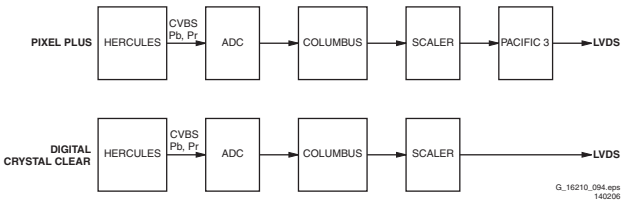

Figure 9-2 Block diagram of the internal building blocks

For more information, please refer to manual LC4.3E AA, 12NC 3122 785 15270

Table 9-1 Models and picture quality

Model	Picture quality
42PF3321/10	Digital Crystal Clear
42PF5321/10/12	Digital Crystal Clear
42PF5411/10	Digital Crystal Clear
42PF7321/10/12	Pixel Plus

9.3 Power Supply Unit

9.3.1 Description

The power supply is a bought module, that consists of the following parts:

- the AC mains input with fuse;
- a separate stand-by supply;
- the mains harmonic circuit;
- the mains rectifier.

The power supply provides the following output voltages:

- 3.3V for the UOCIII, Scaler and other digital circuits;
- unregulated 12V, which is converted to regulated 5V, 8V, and 12V;
- a so-called bolt-on supply, which provides 12V for bolt-on devices (not covered in this manual).

9.3.2 States and Sub-states of the Power Supply

The power supply has three different states. Each of these states has a couple of sub-states:

1. POWER OFF:
   a. PASSIVE OFF:
      The set is switched off completely, the mains cable is disconnected. When the mains is re-connected, the set switches to the last STAND-BY status.
   b. ACTIVE OFF:
      The set is connected to the mains, and consuming a minimum amount of power. This sub-state is similar to NORMAL STAND-BY, but all LED indicators are off. Switch to the ON or STAND-BY mode with the POWER ON/OFF button (in the NAFTA region also with the STAND-BY KEY of the RC).
2. STAND-BY:
   a. NORMAL STAND-BY:
      Only Hercules and NVM are connected to the power (+3V3STBY), other circuits are disconnected. The LED lights red. The signal from a control port can switch the set OFF or ON.
   b. SEMI STAND-BY:
      Only on DVB sets. In this state the LED lights red. +3V3STBY, +12VUNREG, and +12V iBOZ remain ON for a certain time. After that time only +3V3STBY stays ON, only powering Hercules and NVM, so the set is in NORMAL STAND-BY.
3. POWER ON:
   This is the normal operating mode. All power supply lines are available. All circuits are active. From this mode the set can switch to NORMAL STAND-BY, SEMI STAND-BY, OFF, or PROTECTION.

9.4 Abbreviation List

0/6/12	SCART switch control signal on A/V board. 0 = loop through (AUX to TV), 6 = play 16:9 format, 12 = play 4:3 format
1080i	1080 visible lines, interlaced
1080p	1080 visible lines, progressive scan
2CS	2 Carrier Sound (or 2 Channel Stereo)
480i	480 visible lines, interlaced
480p	480 visible lines, progressive scan
ACI	Automatic Channel Installation: algorithm that installs TV channels directly from a cable network by means of a predefined TXT page
ADC	Analogue to Digital Converter
AFC	Automatic Frequency Control; Control signal used to tune and lock to the correct frequency
AGC	Automatic gain control (feedback) signal to the tuner. This circuit ensures a constant output amplitude regardless of the input amplitude
AM	Amplitude Modulation; A "data encoding to a carrier" method, such that the carrier amplitude is proportional to the data value
AP or A/P	Asia Pacific
AR	Aspect Ratio: 4 by 3 or 16 by 9
ASD	Automatic Standard Detection
AV	External Audio Video
B-SC1-IN	Blue SCART1/EXT1 in
B-SC2-IN	Blue SCART2/EXT2 in
B-TXT	Blue TeleteXT
B/G	Monochrome TV system. Sound carrier distance is 5.5 MHz. B= VHF-band, G= UHF-band
C-FRONT	Chrominance front input
CBA	Circuit Board Assembly (also called PCB or PWB)
CL	Constant Level: audio output to connect with an external amplifier
CLUT	Colour Look-Up Table
COFDM	Coded Orthogonal Frequency Division Multiplexing: a multiplexing technique, that distributes the data to be transmitted, over many carriers
COLUMBUS	COLour LUMinance Baseband Universal Subsystem. IC performing noise reduction and 2D/3D comb filtering
ComPair	Computer aided rePair. A tool for diagnosing a TV through a PC controlled interface
CSM	Customer Service Mode
CVBS	Composite Video and Blanking Signal; A single video signal that contains luminance, colour, and timing information
DAC	Digital to Analogue Converter
DBE	Dynamic Bass Enhancement: extra low frequency amplification
DFU	Directions For Use: Owner's manual
DMMI	Digital Multi Media Interface
DNR	Dynamic Noise Reduction / Digital Noise Reduction; Noise reduction feature of the set
DRAM	Dynamic RAM; dynamically refreshed RAM
DSP	Digital Signal Processing
DST	Dealer Service Tool; Special remote control designed for dealers to enter e.g. service mode (a DST-emulator is available in ComPair)

EEPROM	Electrically Erasable and Programmable Read Only Memory
EPG	Electronic Program Guide: system used by broadcasters to transmit TV guide information (= NexTView)
EU	Europe
EXT	EXTernal (source), entering the set by SCART or by cinches (jacks)
FBL	Fast BLanking; DC signal accompanying RGB signals. To blank the video signal when it is returning from the right side of the screen to the left side. The video level is brought down below the black video level
FM	Field Memory; A memory chip that is capable of storing one or more TV picture fields / Frequency Modulation; A technique that sends data as frequency variations of a carrier signal
FRC	Frame Rate Converter
H	H_sync to the module
HA	Horizontal Acquisition; horizontal sync pulse
HD	High Definition
HDMI	High Definition Multimedia Interface
HP	HeadPhone
I	Monochrome TV system. Sound carrier distance is 6.0 MHz. VHF- and UHF-band
I^2C	Integrated IC bus
I^2S	Integrated IC Sound bus
IBO	Intelligent Bolt-On module
IC	Integrated Circuit
IF	Intermediate Frequency
Interlaced	Scan mode where two fields are used to form one frame. Each field contains half the number of the total amount of lines. The fields are written in "pairs", causing line flicker.
IR	Infra Red
IRQ	Interrupt ReQuest
Last Status	The settings last chosen by the customer and read and stored in RAM or in the NVM. They are called at start-up of the set to configure it according to the customer's preferences
LATAM	LATin AMerica
LC04	Philips chassis name for LCD (and Plasma) TV 2004 project
LCD	Liquid Crystal Display
LED	Light Emitting Diode; A semiconductor diode that emits light when a current is passed through it
L/L'	Monochrome TV system. Sound carrier distance is 6.5 MHz. L' is Band I, L is all bands except for Band I
LS	LoudSpeaker
LVDS	Low Voltage Differential Signalling, data transmission system for high speed and low EMI communication.
M/N	Monochrome TV system. Sound carrier distance is 4.5 MHz. M= 525 lines @ 60 Hz, N= 625 lines @ 50 Hz
MOSFET	Metal Oxide Semiconductor Field Effect Transistor
MPEG	Motion Pictures Experts Group. An ISO/IEC body that has given its name to an image compressing scheme for moving video
MSP	Multi-standard Sound Processor: ITT sound decoder
MUTE	MUTE Line
NC	Not Connected
NICAM	Near Instantaneously Companded Audio Multiplexing; This is a digital sound system, mainly used in Europe
NTSC	National Television Standard Committee. Colour system used mainly in North America and Japan. Colour carrier NTSC M/N = 3.579545 MHz, NTSC 4.43 = 4.433619 MHz (this is a VCR norm, it is not transmitted off-air)
NVM	Non Volatile Memory; IC containing data such as alignment values, preset stations
O/C	Open Circuit
ON/OFF LED	On/Off control signal for the LED
OSD	On Screen Display
PAL	Phase Alternating Line. Colour system used mainly in Western Europe (colour carrier = 4.433619 MHz) and South America (colour carrier PAL M = 3.575612 MHz and PAL N = 3.582056 MHz)
PC	Personal Computer
PCB	Printed Circuit Board (or PWB)
PIP	Picture In Picture
PLL	Phase Locked Loop. Used, for example, in FST tuning systems. The customer can directly provide the desired frequency
Progressive Scan	Scan mode where all scan lines are displayed in one frame at the same time, creating a double vertical resolution.
PWB	Printed Wiring Board (also called PCB or CBA)
RAM	Random Access Memory
RC	Remote Control transmitter
RC5 or 6	Remote Control system 5 or 6, the signal from the remote control receiver
RGB	Red, Green, and Blue colour space; The primary colour signals for TV. By mixing levels of R, G, and B, all colours (Y/C) are reproduced
RGBHV	Red, Green, Blue, Horizontal sync, and Vertical sync
ROM	Read Only Memory
SAM	Service Alignment Mode
S/C	Short Circuit
SCART	Syndicat des Constructeurs d'Appareils Radiorécepteurs et Téléviseurs; This is a 21-pin connector used in EU, that carries various audio, video, and control signals (it is also called Péritel connector)
SCL	Serial CLock Signal on I^2C bus
SD	Standard Definition
SDA	Serial DAta Signal on I^2C bus
SDRAM	Synchronous DRAM
SECAM	SÉquence Couleur Avec Mémoire; Colour system mainly used in France and East Europe. The chroma is FM modulated and the R-Y and B-Y signals are transmitted line sequentially. Colour carriers= 4.406250 MHz and 4.250000 MHz
SIF	Sound Intermediate Frequency
SMPS	Switched Mode Power Supply
SND	SouND
SOPS	Self Oscillating Power Supply
SRAM	Static RAM
STBY	STandBY
SVHS	Super Video Home System
SW	Software or Subwoofer or Switch
THD	Total Harmonic Distortion

TXT	Teletext; TXT is a digital addition to analogue TV signals that contain textual and graphical information (25 rows x 40 columns). The information is transmitted within the first 25 lines during the Vertical Blank Interval (VBI)
uP	Microprocessor
UOC	Ultimate One Chip, or Hercules
VA	Vertical Acquisition
VL	Variable Level out: processed audio output towards external amplifier
VCR	Video Cassette Recorder
VGA	Video Graphics Array; 640x480 (4:3)
WD	Watch Dog
WYSIWYR	What You See Is What You Record: record selection that follows main picture and sound
XTAL	Quartz crystal
Y	Luminance signal
Y/C	Y consists of luminance signal, blanking level and sync; C consists of chroma (colour) signal
YPbPr	This is a scaled version of the YUV colour space. Y= Luminance, Pb/Pr= Colour difference signals B-Y and R-Y, other amplitudes w.r.t. to YUV
YUV	Colour space used by the NTSC and PAL video systems. Y is the luminance and U/V are the colour difference signals

9.5 IC Data Sheets

This section shows the internal block diagrams and pin layouts of ICs that are drawn as "black boxes" in the electrical diagrams (with the exception of "memory" and "logic" ICs).

9.5.1 Diagram B2, Type TDA15021H (IC7217, Hercules)

Block Diagram

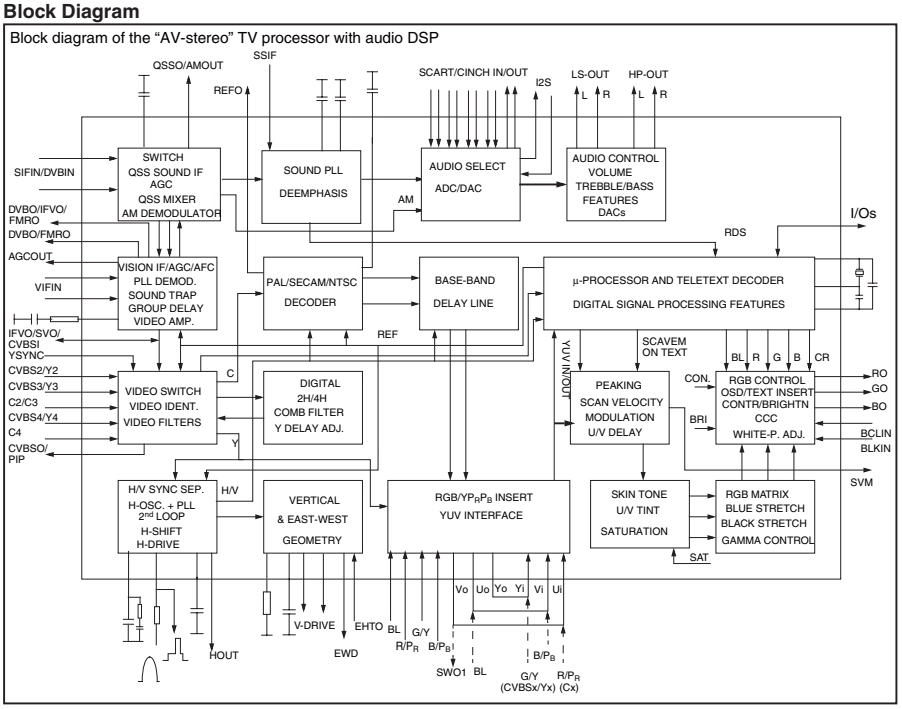

Pin Configuration

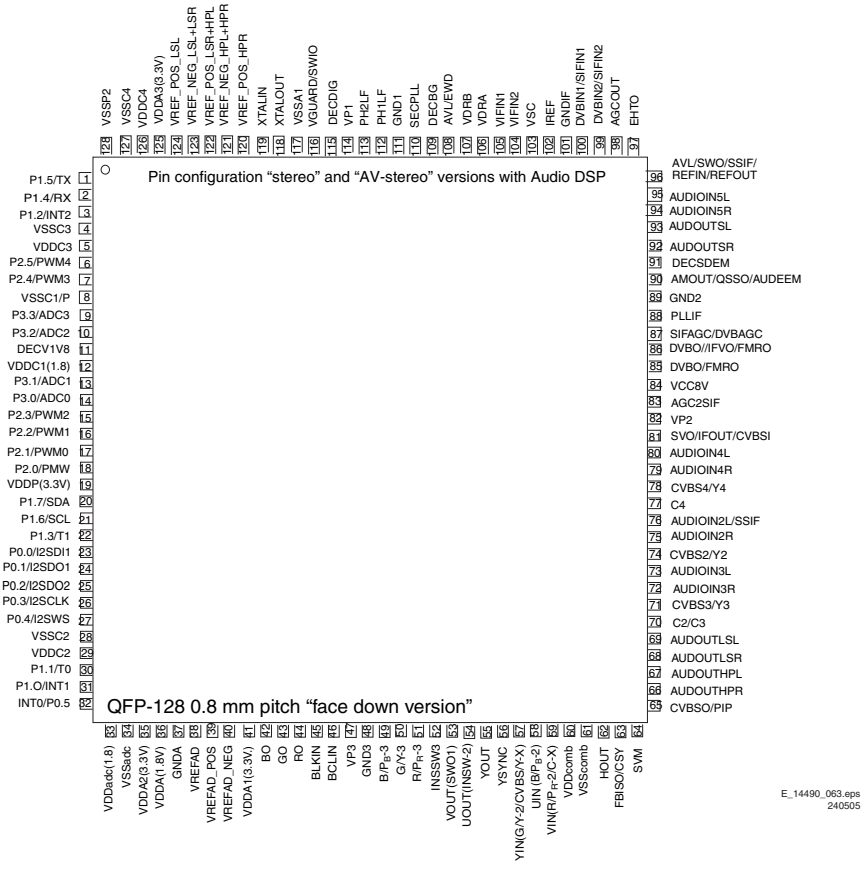

Figure 9-3 Internal block diagram and pin configuration

9.5.2 Diagram B19, Type T6TU5XB (IC7M00, Columbus)

Figure 1 Package outline (top view)

	1	2	3	4	5	6	7	8	9	10	11	12	13	14	15	
A	WEB/ DAVB	UVA0 /Di0	UVA2 /Di2	UVA4 /Di4	UVA6 /Di6	UVA8 /Di8	SEL656	TST1	YA2	YA4	YA6	YA8	VA	HREF	SDA	A
B	YB8	VSS	UVA1 /Di1	UVA3 /Di3	UVA5 /Di5	UVA7 /Di7	YA0 /Di9	BISTEN	YA1	YA3	YA5	YA7	WEA/ DAVA	VSS	SCL	B
C	YB7	YB6	VSS	VDDS	VSS	VSS	VDDC	VDDC	VSS	VSS	VDDC	VDDS	VSS	SNDA	SNRST	C
D	YB5	YB4	VDDC	N.C.									VSS	SNCL	TCK	D
E	YB3	YB2	VSS										VDDC	TMS	TDO	E
F	TST2	YB1	VSS										VSS	TRST	TDI	F
G	CLKASB	YB0 /Do9	VDDS										VDDS	A0ICC	RESET	G
H	CLKASA	UVB8/ Do8	TST3										VDDC	CLK EXT	CLKSEL	H
J	UVB7 /Do7	UVB6/ Do6	VSS										VSS	CLK	WEN	J
K	UVB5 /Do5	UVB4/ Do4	VDDC										VSS	CASN	RASN	K
L	UVB3 /Do3	UVB2 /Do2	VSS										VDDS	DQM	DQ16	L
M	UVB1 /Do1	UVB0 /Do0	VDDS										VSS	DQ14	DQ15	M
N	AVD	N.C.	VDDS	VSS	VSS	VDDC	VSS	VDDS	VDDC	VSS	VDDS	VSS	VSS	VDDS	DQ13	N
P	AVS	VSS	A7	A9	A2	A0	A11	DQ7	DQ6	DQ4	DQ3	DQ1	VDDS	VSS	DQ12	P
R	A4	A5	A6	A8	A3	A1	A10	DQ8	VSS	DQ5	VSS	DQ2	DQ9	DQ10	DQ11	R
	1	2	3	4	5	6	7	8	9	10	11	12	13	14	15	

COLUMBUS TOP-VIEW

PPA Version 2.7

E_14600_059.eps
200804

Figure 9-4 Pin configuration

9.5.3 Diagram B7+B8+B9, Type GM1501 (IC7801, Genesis)

Block Diagram

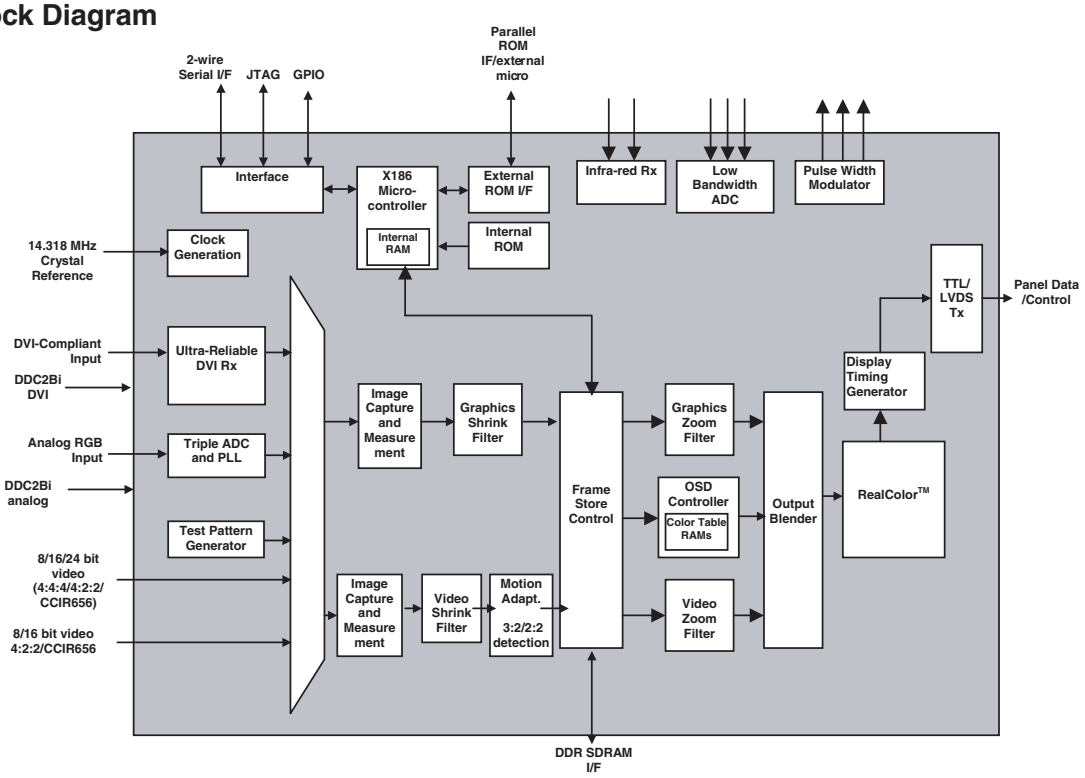

Pin Configuration

	1	2	3	4	5	6	7	8	9	10	11	12	13
A	NC	ADC_3.3	ADC_1.8	ADC_1.8	ADC_DGND	RXC+	DVI_GND	RX0+	RX1+	RX2+	DVI_GND	LBADC_N3	D_GND
B	BLUE-	BLUE+	ADC_3.3	ADC_DGND	DVI_GND	RXC-	DVI_GND	RX0-	RX1-	RX2-	REXT	LBADC_N2	D_GND
C	GREEN-	GREEN+	SOG	ADC_AGND	NC	DVI_3.3	DVI_GND	DVI_3.3	DVI_3.3	DVI_3.3	DVI_3.3	LBADC_N1	LBADC_33
D	RED-	RED+	ADC_3.3	ADC_AGND	NC	DVI_1.8	DVI_GND	DVI_1.8	DVI_1.8	DVI_1.8	DVI_GND	LBADC_ RETURN	LBADC_GND
E	ADC_AGND	ADC_AGND	ADC_3.3	ADC_AGND									
F	NC	VDDD33_ PLL	VSSA33_ RPLL	VDDA33_ RPLL									
G	VDDA33_ FPLL	VSSD33_ PLL	TCLK	XTAL									
H	VDDD33_ SDDS	VSSA33_ SDDS	VDDA33_ SDDS	VSSA33_ FPLL									
J	VDDD33_ DDDS	VSSA33_ DDDS	VDDA33_ DDDS	VSSD33_ SDDS									
K	RESETn	ACS_ RSET_HD	NC	VSSD33_ DDDS						CORE_1.8	CORE_1.8	D_GND	D_GND
L	OCM_INT2	OCM_INT1	AVSYNC	AHSYNC						D_GND	CORE_1.8	D_GND	D_GND
M	OCM_UDO	OCM_UDI	IR0	IR1						D_GND	D_GND	D_GND	D_GND
N	VGA_SDA	VGA_SCL	DVI_SDA	DVI_SCL						D_GND	D_GND	D_GND	D_GND
P	OCM_CS1n	OCM_CS2n	MSTR_SDA	MSTR_SCL						D_GND	D_GND	D_GND	D_GND
R	ROM_CSn	OCM_REn	OCM_WEn	EXTCLK						D_GND	D_GND	D_GND	D_GND
T	OCMADDR 17	OCMADDR 18	OCMADDR 19	OCM_CS0n						D_GND	CORE_1.8	D_GND	D_GND
U	OCMADDR 13	OCMADDR 14	OCMADDR 15	OCMADDR 16						CORE_1.8	CORE_1.8	D_GND	D_GND
V	OCMADDR 9	OCMADDR 10	OCMADDR 11	OCMADDR 12									
W	OCMADDR 6	OCMADDR 7	OCMADDR 8	IO_3.3									
Y	OCMADDR 3	OCMADDR 4	OCMADDR 5	IO_3.3									
AA	OCMADDR 0	OCMADDR 1	OCMADDR 2	IO_3.3									
AB	OCMDATA13	OCMDATA14	OCMDATA15	IO_3.3									
AC	OCMDATA10	OCMDATA11	OCMDATA12	IO_3.3	GPIO_G09_ B2 (DEGRN0)	IO_3.3	DCLK	IO_3.3	GPIO_G07_ B2 (DERED4)	IO_3.3	SHIELD[1] (DEGRN3)	LVDSB_3.3	LVDSB_GND
AD	OCMDATA9	OCMDATA6	OCMDATA3	OCMDATA0	GPIO_G09_ B3 (DEGRN1)	GPIO_G08_ B0 (DORED0)	DEN	GPIO_G08_ B5 (DOBLU1)	GPIO_G07_ B3 (DERED5)	GPIO_G07_ B6 (DERED8)	SHIELD[2] (DEGRN4)	LVDSB_3.3	LVDSB_3.3
AE	OCMDATA8	OCMDATA5	OCMDATA2	GPIO_G09_ B0 (DERED0)	GPIO_G09_ B4 (DEBLU0)	GPIO_G08_ B1 (DORED1)	GPIO_G08_ B3 (DOGRN1)	GPIO_G07_ B0 (DERED2)	GPIO_G07_ B4 (DERED6)	GPIO_G07_ B7 (DERED9)	SHIELD[3] (DEGRN5)	BC+ (DEGRN8)	SHIELD[4] (DEBLU2)
AF	OCMDATA7	OCMDATA4	OCMDATA1	GPIO_G09_ B1 (DERED1)	GPIO_G09_ B5 (DEBLU1)	GPIO_G08_ B2 (DOGRN0)	GPIO_G08_ B4 (DOBLU0)	GPIO_G07_ B1 (DERED3)	GPIO_G07_ B5 (DERED7)	SHIELD[0] (DEGRN2)	B3+ (DEGRN6)	B3- (DEGRN7)	BC- (DEGRN9)

E_14490_099.eps
241204

Figure 9-5 Internal block diagram and pin configuration

9.5.4 Diagram B12, Type TDA9975EL (IC7D03, HDMI Panellink), Reserved

Block Diagram

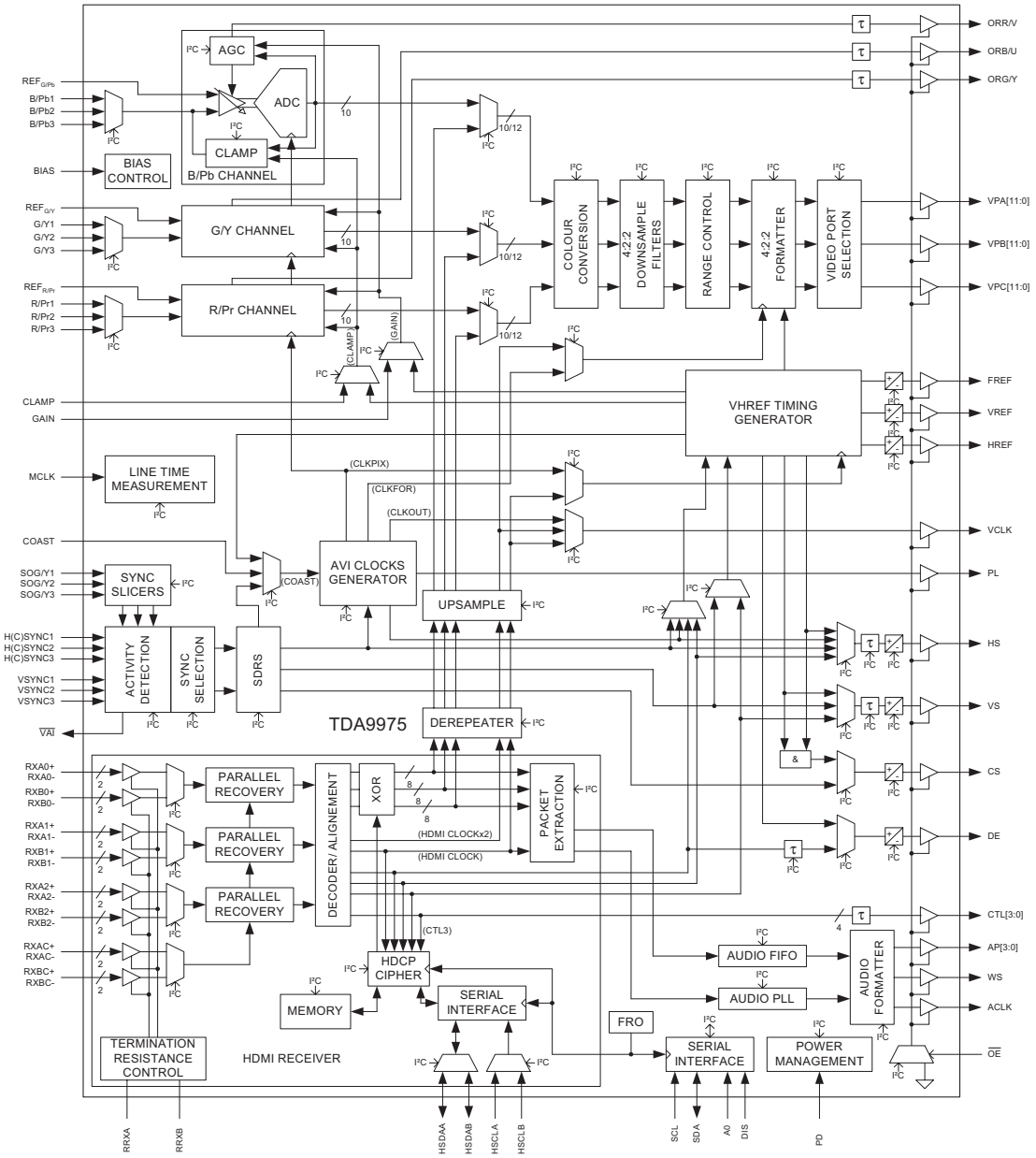

Pin Configuration

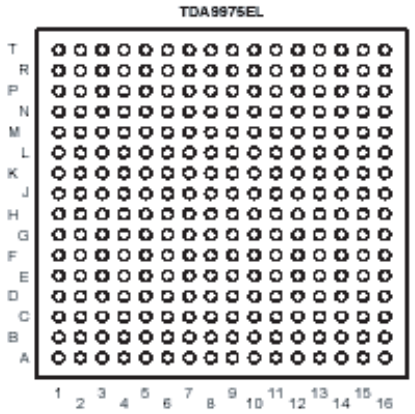

F_15400_135.eps
240505

Figure 9-6 Internal block diagram and pin configuration

10. Spare Parts List

CTN's processed

42PF5321/10
42PF5321/12
42PF7321/12

Set Level

Various

1099⚠	9322 232 75682	PDP 42V7K462
1099⚠	9322 233 80682	PDP S42AX-YD01
1112	3104 328 39571	LED panel
1174	3139 267 22281	Audio Amp assy 42-50
8152	3104 311 09921	Cable 9p/680/9p
8302	3104 311 03601	Cable 7p/400/7p
8302	3104 311 07241	Cable 7p/1000/7p
8870	3104 311 07181	Cable 6p/820/6p Wh
8870	3104 311 07421	Cable 6p/680/6p
8900	3104 311 07911	Cable ring/180/ring
8P06	3104 311 08831	Cable 31p/300/31p
8P06	3104 311 10492	Cable 31P/220/31P

PDP FHP Supply Panel [A]

Various

0308	2422 025 16269	Connector 2p m
0309	2422 015 18552	Connector 1P m
0311	2422 025 10769	Connector 9p m
0323	2422 025 15085	Connector 10p m
1002	2422 025 09407	Connector 7p m
1004	2422 086 00676	Fuse 2A T 250V
1082	2422 086 00677	Fuse 2.5A T 250V
1083	2422 086 00677	Fuse 2.5A T 250V
1084	2422 086 10849	Fuse 1A F 250V
1110	2422 086 00678	Fuse 5A T 250V
1200	2422 086 00676	Fuse 2A T 250V
1260	2422 086 10588	Fuse 2A T 65V
1400	2422 086 00806	Fuse 6.3A HT 250V
1402	2422 549 42349	Surge Prot. DSP501N
1450	2422 132 07357	Relay 1p 9V 10/80A
1460	2422 132 07357	Relay 1p 9V 10/80A
1M03	2422 025 10771	Connector 10p m
1M05	2422 025 16374	Connector 2p m
1M10	2422 025 09406	Connector 4p m
1M46	2422 025 10655	Connector 11p m

⊣⊢

2000	2022 554 04155	470pF 20% 250V
2001	2222 338 22474	470nF 20% 275V
2005	2238 867 18101	100pF 1% 50V 0603
2006	3198 035 01020	1nF X7R 50V 0402
2007	3198 017 31040	100nF 20% 50V 0603
2008	3198 017 31030	10nF 20% 50V 0603
2009	3198 030 82280	2.2µF 20% 50V
2010	3198 017 31030	10nF 20% 50V 0603
2011	2222 375 90158	15nF 5% 1.6kV
2012	3198 019 73310	330pF 10% 2.5kV
2013	3198 019 73310	330pF 10% 2.5kV
2014	3198 019 71520	1.5nF 2kV
2015	3198 017 31030	10nF 20% 50V 0603
2016	3198 030 82280	2.2µF 20% 50V
2017	2222 375 90158	15nF 5% 1.6kV
2018	2238 867 18101	100pF 1% 50V 0603
2019	2022 554 04155	470pF 20% 250V
2020	2020 024 90737	3300µF 20% 100V
2021	2020 024 90737	3300µF 20% 100V
2022	3198 038 51020	1000F 20% 50V
2023	2222 580 15649	100nF 10% 50V 0805
2024	3198 035 03320	3.3nF 5% 50V 0402
2025	3198 030 81080	1F 20% 50V
2026	3198 035 02220	2.2nF 50V 0402
2027	2020 552 96631	15nF 10% 16V 0402
2028	2238 930 11541	220pF 5% 200V
2029	2238 930 11541	220pF 5% 200V
2030	3198 017 31040	100nF 20% 50V 0603
2031	3198 035 21030	10nF 16V 0402
2032	2238 586 15641	22nF 10% 50V 0603
2033	3198 017 31040	100nF 20% 50V 0603
2034	2020 558 90511	47pF 5% 1kV
2035	3198 035 01020	1nF X7R 50V 0402
2036	2238 586 15641	22nF 10% 50V 0603
2037	2020 558 90511	47pF 5% 1kV
2038	3198 035 01020	1nF X7R 50V 0402
2039	3198 035 02220	2.2nF 50V 0402
2040	3198 034 02790	47pF 1% 50V 0402
2041	3198 034 01010	100pF 50V 0402
2042	3198 035 03310	330pF 5% 50V 0402
2043	3198 030 81080	1F 20% 50V
2044	2238 930 11541	220pF 5% 200V
2045	2238 930 11541	220pF 5% 200V
2046	2252 568 08305	33pF 5% 500V
2047	3198 017 31040	100nF 20% 50V 0603
2048	2020 552 96683	220nF 10% 50V
2049	2238 867 18101	100pF 1% 50V 0603
2050	2238 586 15641	22nF 10% 50V 0603
2051	3198 017 01030	10nF 50V X7R 0805
2052	3198 026 41020	1000F 20% 35V
2053	3198 030 72290	22µF 20% 35V
2054	2020 552 00216	220pF 5% 50V 0402
2054	2020 552 00234	220pF 5% 50V
2055	3198 035 01520	1.5nF 50V 0402
2056	2020 552 00216	220pF 5% 50V 0402
2056	2020 552 00234	220pF 5% 50V
2057	3198 035 01520	1.5nF 50V 0402
2058	2020 012 93279	1F 20% 250V
2059	3198 017 31040	100nF 20% 50V 0603
2060	2020 552 96683	220nF 10% 50V
2061	3198 017 31040	100nF 20% 50V 0603
2062	3198 030 82280	2.2µF 20% 50V
2070	3198 035 01020	1nF X7R 50V 0402
2071	3198 035 01020	1nF X7R 50V 0402
2090	3198 030 74780	4u7 20% 35V
2112	3198 035 01020	1nF X7R 50V 0402
2113	3198 025 32210	220µF 20% 25V
2114	2020 552 96683	220nF 10% 50V
2117	2222 780 15656	330nF 10% 16V
2118	3198 019 61020	1nF 10% 1kV
2121	2020 024 90736	2200µF 20% 100V
2122	2222 365 75105	1F 10% 63V
2123	3198 035 03320	3.3nF 5% 50V 0402
2126	3198 017 31040	100nF 20% 50V 0603
2133	3198 025 52290	22µF 20% 50V
2203	3198 017 31040	100nF 20% 50V 0603
2205	3198 030 74780	4u7 20% 35V
2210	3198 030 44790	47µF 20% 16V SMD
2211	3198 035 04710	470pF 50V 0402
2212	2020 552 95419	220nF 10% 16V
2212	2020 552 96326	220nF 10% 16V
2212	2238 780 15654	220nF 10% 16V 0805
2213	3198 035 03320	3.3nF 5% 50V 0402
2214	3198 035 03320	3.3nF 5% 50V 0402
2215	3198 035 04710	470pF 50V 0402
2217	2222 780 15656	330nF 10% 16V
2218	2222 375 90141	3.3nF 1.6kV 5%
2222	3198 034 01010	100pF 50V 0402
2223	3198 034 01010	100pF 50V 0402
2225	2020 021 91551	2200µF 20% 25V
2226	3198 017 31040	100nF 20% 50V 0603
2227	3198 034 01010	100pF 50V 0402
2229	2020 021 00036	470µF 20% 16V
2230	2020 021 00036	470µF 20% 16V
2231	3198 030 44790	47µF 20% 16V SMD
2232	3198 034 01010	100pF 50V 0402
2234	2020 552 96448	1µF 10% 16V 0805
2234	2222 780 15663	1µF 10% 0805
2236	3198 030 41090	10µF 20% 16V
2237	3198 030 41090	10µF 20% 16V
2261	3198 026 51020	1000µF 50V
2263	2222 861 15272	2.7nF 5% 50V 0805
2264	2222 780 15658	470nF 10% 16V
2265	3198 035 03310	330pF 5% 50V 0402
2266	3198 030 74780	4u7 20% 35V
2267	3198 016 01010	100pF 10% 50V 0805
2268	2020 552 96683	220nF 10% 50V
2269	3198 026 22220	2200µF 20% 16V
2270	3198 025 34790	47µF 20% 25V
2273	3198 017 31040	100nF 20% 50V 0603
2274	3198 035 21030	10nF 16V 0402
2290	3198 017 31030	10nF 20% 50V 0603
2291	3198 035 04710	470pF 50V 0402
2292	3198 026 51020	1000µF 50V
2293	3198 035 04710	470pF 50V 0402
2294	3198 026 51020	1000µF 50V
2295	3198 035 04710	470pF 50V 0402
2296	3198 035 04710	470pF 50V 0402
2304	3198 035 01020	1nF X7R 50V 0402
2305	3198 017 31040	100nF 20% 50V 0603
2306	3198 017 31040	100nF 20% 50V 0603
2322	3198 017 31040	100nF 20% 50V 0603
2324	3198 017 31040	100nF 20% 50V 0603
2343	3198 030 82280	2.2µF 20% 50V
2350	3198 030 41010	100µF 20% 16V
2352	3198 017 31040	100nF 20% 50V 0603
2364	3198 017 31040	100nF 20% 50V 0603
2376	3198 017 31040	100nF 20% 50V 0603
2377	3198 017 31040	100nF 20% 50V 0603
2381	3198 017 31040	100nF 20% 50V 0603
2385	3198 035 21030	10nF 16V 0402
2386	3198 035 21030	10nF 16V 0402
2387	3198 030 41010	100µF 20% 16V
2388	3198 035 21030	10nF 16V 0402
2389	3198 035 01020	1nF X7R 50V 0402
2390	3198 035 01020	1nF X7R 50V 0402
2397	3198 030 41010	100µF 20% 16V
2398	3198 030 41090	10µF 20% 16V
2400	2222 338 22474	470nF 20% 275V
2401	2222 338 22474	470nF 20% 275V
2404	2020 558 90511	47pF 5% 1kV
2405	2022 554 04155	470pF 20% 250V
2406	2020 558 90511	47pF 5% 1kV
2407	2022 554 04155	470pF 20% 250V
2465	3198 030 41010	100µF 20% 16V
2502	3198 034 01010	100pF 50V 0402
2503	2020 024 90708	47µF 400V 20%
2504	3198 035 01020	1nF X7R 50V 0402
2505	3198 026 51020	1000µF 50V
2507	3198 034 01010	100pF 50V 0402
2508	3198 030 41010	100µF 20% 16V
2509	3198 034 01010	100pF 50V 0402
2510	2020 021 91506	1000µF 20% 16V
2511	3198 017 31040	100nF 20% 50V 0603
2512	3198 017 31040	100nF 20% 50V 0603
2513	2222 580 15649	100nF 10% 50V 0805
2532	3198 030 41010	100µF 20% 16V
2533	3198 030 41010	100µF 20% 16V
2534	2020 552 96448	1µF 10% 16V 0805
2534	2222 780 15663	1µF 10% 0805
2540	3198 030 41010	100µF 20% 16V
2541	3198 030 41010	100µF 20% 16V
2542	3198 017 31040	100nF 20% 50V 0603
2600	3198 019 51020	1nF 1.5kV
2601	3198 019 51020	1nF 1.5kV
2602	3198 035 02220	2.2nF 50V 0402
2603	2222 383 90136	1µF 5% 400V
2605	2222 383 90136	1µF 5% 400V
2608	3198 035 01020	1nF X7R 50V 0402
2610	2222 375 90237	1.8nF 5% 2kV
2611	3198 019 72210	220pF 10% 2kV
2612	3198 035 01020	1nF X7R 50V 0402
2614	3198 035 02220	2.2nF 50V 0402
2616	2020 024 90706	220F 20% 400V
2617	2020 024 90706	220F 20% 400V
2640	3198 035 04710	470pF 50V 0402
2642	3198 035 01020	1nF X7R 50V 0402
2651	3198 035 21030	10nF 16V 0402
2653	3198 035 06810	680pF 5% 50V 0402
2654	3198 030 44790	47µF 20% 16V SMD
2655	2020 552 96448	1µF 10% 16V 0805
2655	2222 780 15663	1µF 10% 0805
2656	2222 580 15649	100nF 10% 50V 0805
2660	3198 016 34710	470pF 10% 50V 0603
2661	3198 035 01020	1nF X7R 50V 0402
2662	3198 026 31020	1000µF 20% 25V
2663	3198 014 01050	1F 10% 50V
2664	3198 025 51010	100µF 20% 50V
2665	3198 016 34710	470pF 10% 50V 0603
2666	2020 552 96793	4.7nF 10% 50V 0402
2670	3198 017 31040	100nF 20% 50V 0603
2671	3198 017 31040	100nF 20% 50V 0603
2672	2222 580 15649	100nF 10% 50V 0805
2673	2020 558 00005	10nF 10% 630V 1206
2673	2020 558 90621	10nF 630V
2674	2020 558 00005	10nF 10% 630V 1206
2674	2020 558 90621	10nF 630V
2675	2020 558 00005	10nF 10% 630V 1206
2675	2020 558 90621	10nF 630V
2676	2020 558 00005	10nF 10% 630V 1206
2676	2020 558 90621	10nF 630V
2677	3198 035 02220	2.2nF 50V 0402
2690	3198 035 01020	1nF X7R 50V 0402

⌐WW⌐

3001	3198 021 34710	470Ω 5% 0603
3002	3198 021 34710	470Ω 5% 0603
3003	3198 031 01040	100kΩ 5% 0402
3004	3198 031 01530	15kΩ 5% 0.01W 0402
3005	3198 031 02730	27kΩ 5% 0402
3006	3198 031 01030	10kΩ 5% 0402
3007	3198 031 04720	4.7kΩ 5% 0402

3008	3198 021 31020	1kΩ 5% 0.062W 0603
3009	3198 021 31020	1kΩ 5% 0.062W 0603
3010	3198 031 01530	15kΩ 5% 0.01W 0402
3011	3198 021 35610	560Ω 5% 0.062W 0603
3012	3198 031 04720	4.7kΩ 5% 0402
3013	3198 031 01030	10kΩ 5% 0402
3014	3198 039 33090	33Ω 1%
3015	3198 039 10090	10Ω 1%
3016	3198 021 51020	1kΩ 5% 0805
3017	3198 039 33090	33Ω 1%
3018	3198 039 10090	10Ω 1%
3019	3198 021 51020	1kΩ 5% 0805
3020	3198 031 05630	56kΩ 5% 0402
3021	3198 012 26880	6Ω8 5% 2W
3022	3198 021 36810	680Ω 5% 0.062W 0603
3023	3198 031 04730	47Ω 5% 0402
3024	2322 734 61504	150kΩ 1% 0805
3025	2322 706 71802	1.8kΩ 5% 0402
3026	3198 021 56840	680kΩ 5% 0805
3027	3198 031 04730	47Ω 5% 0402
3028	2322 704 67502	7.5kΩ 1% 0.5W
3029	3198 021 31230	12kΩ 5% 0.062W 0603
3030	3198 031 01830	18kΩ 5% 0.01W 0402
3031	2322 706 71003	10kΩ 5% 0402
3032	2322 706 71003	10kΩ 5% 0402
3033	2322 705 70184	180Ω 5% 0402
3034	3198 031 02210	220Ω 5% 0402
3035	3198 021 56840	680kΩ 5% 0805
3036	2122 612 00068	NTC 1Ω 20% 6W
3037	3198 031 01030	10kΩ 5% 0402
3038	3198 031 01040	100kΩ 5% 0402
3039	3198 021 31050	1MΩ 5% 0603
3040	3198 021 51040	100kΩ 5% 0805
3041	3198 031 03330	33kΩ 5% 0402
3042	3198 021 34710	470Ω 5% 0603
3043	3198 031 04720	4.7kΩ 5% 0402
3044	3198 021 31020	1kΩ 5% 0.062W 0603
3045	3198 021 31020	1kΩ 5% 0.062W 0603
3046	2322 241 53565	5.6MΩ 5%
3047	3198 031 01540	150kΩ 5% 0402
3048	3198 031 04720	4.7kΩ 5% 0402
3049	3198 031 01230	12kΩ 5% 0402
3050	2306 204 03398	3.9Ω 5%
3051	3198 021 58220	8.2kΩ 5% 0805
3052	2322 734 61504	150kΩ 1% 0805
3053	2322 662 93131	PTC 10Ω
3054	3198 031 04710	470Ω 5% 0402
3055	3198 021 51030	10kΩ 5% 0805
3056	3198 021 33310	330Ω 5% 0.062W 0603
3057	3198 021 31010	100Ω 5% 0.062W 0603
3058	3198 021 51050	1MΩ 5% 0805
3059	3198 031 05630	56kΩ 5% 0402
3060	3198 039 22040	220kΩ 1%
3061	3198 031 01830	18kΩ 5% 0.01W 0402
3062	3198 031 01020	1kΩ 5% 0402
3063	3198 031 01020	1kΩ 5% 0402
3064	3198 031 01030	10kΩ 5% 0402
3065	3198 031 01020	1kΩ 5% 0402
3066	3198 031 01030	10kΩ 5% 0402
3067	3198 031 01530	15kΩ 5% 0.01W 0402
3068	3198 031 01030	10kΩ 5% 0402
3069	3198 021 34710	470Ω 5% 0603
3070	3198 021 31030	10kΩ 5% 0.062W 0603
3071	3198 031 04730	47Ω 5% 0402
3072	3198 012 14720	4.7kΩ +100%/-0% 1W
3073	3198 031 01050	1MΩ 5% 0402
3074	3198 031 01530	15kΩ 5% 0.01W 0402
3075	3198 021 51050	1MΩ 5% 0805
3076	3198 031 01040	100kΩ 5% 0402
3077	3198 021 51050	1MΩ 5% 0805
3078	3198 031 01040	100kΩ 5% 0402
3079	3198 021 36810	680Ω 5% 0.062W 0603
3080	3198 021 36810	680Ω 5% 0.062W 0603
3081	3198 031 01520	1.2kΩ 5% 0.01W 0402
3082	3198 031 01520	1.2kΩ 5% 0.01W 0402
3083	3198 039 10020	1kΩ 1% 0.5W
3084	3198 031 01030	10kΩ 5% 0402
3085	3198 031 04730	47Ω 5% 0402
3086	3198 031 04730	47Ω 5% 0402
3087	3198 031 04730	47Ω 5% 0402
3088	3198 031 04730	47Ω 5% 0402
3089	3198 031 01030	10kΩ 5% 0402
3090	3198 031 01010	1Ω 5% 0402
3091	3198 021 31020	1kΩ 5% 0.062W 0603
3092	3198 021 51020	1kΩ 5% 0805
3093	3198 031 01020	1kΩ 5% 0402
3094	3198 021 51020	1kΩ 5% 0805
3095	3198 031 04710	470Ω 5% 0402
3096	3198 031 05620	5.6kΩ 5% 0.01W 0402
3097	3198 031 08210	820Ω 5% 0.5W
3098	3198 031 01020	1kΩ 5% 0402
3100	2322 706 71002	1kΩ 1% 0402
3101	2322 706 71002	1kΩ 1% 0402
3102	2322 706 71002	1kΩ 1% 0402
3103	2322 706 71002	1kΩ 1% 0402
3104	2322 706 71002	1kΩ 1% 0402
3106	3198 021 52720	2.7kΩ 5% 0805
3107	3198 021 52720	2.7kΩ 5% 0805
3108	3198 021 52720	2.7kΩ 5% 0805
3109	3198 021 52720	2.7kΩ 5% 0805
3110	3198 031 01020	1kΩ 5% 0402
3112	3198 021 31020	1kΩ 5% 0.062W 0603
3113	3198 031 04740	470kΩ 5% 0402
3114	2322 705 70564	560kΩ 5% 0402
3115	3198 031 02240	220kΩ 5% 0.1W 0402
3116	3198 031 01020	1kΩ 5% 0402
3117	3198 031 01030	10kΩ 5% 0402
3118	2122 118 06084	0.051Ω 5% 1W 2512
3120	3198 021 31820	1.8kΩ 5% 0.062W 0603
3121	3198 031 04730	47Ω 5% 0402
3122	2322 734 67503	75kΩ 1% 0.062W 0805
3123	3198 021 51830	18kΩ 5% 0805
3124	2322 704 67502	7.5kΩ 1% 0.5W
3125	2322 704 67502	7.5kΩ 1% 0.5W
3126	2322 706 72202	2.2kΩ 5% 0402
3128	3198 031 03330	33kΩ 5% 0402
3130	3198 021 31230	12kΩ 5% 0.062W 0603
3131	2322 706 71003	10kΩ 5% 0402
3132	3198 031 02210	220Ω 5% 0402
3133	3198 021 31010	100Ω 5% 0.062W 0603
3134	3198 021 36810	680Ω 5% 0.062W 0603
3135	3198 031 04730	47Ω 5% 0402
3136	3198 031 04730	47Ω 5% 0402
3143	3198 012 34720	4.7kΩ 5% 3W
3147	2322 706 71003	10kΩ 5% 0402
3149	2306 204 03478	Fuse 4.7Ω 5% NFR25
3150	3198 031 01050	1MΩ 5% 0402
3200	3198 021 53340	330kΩ 5% 0805
3202	3198 021 34790	47Ω 5% 0603
3203	3198 021 31010	100Ω 5% 0.062W 0603
3204	3198 031 01040	100kΩ 5% 0402
3205	3198 031 01540	150kΩ 5% 0402
3206	3198 021 52720	2.7kΩ 5% 0805
3207	3198 021 52720	2.7kΩ 5% 0805
3208	3198 021 52720	2.7kΩ 5% 0805
3209	3198 021 52720	2.7kΩ 5% 0805
3210	2322 706 71002	1kΩ 1% 0402
3212	3198 021 31020	1kΩ 5% 0.062W 0603
3213	3198 031 03330	33kΩ 5% 0402
3214	2322 705 70124	120kΩ 5% 0402
3215	2322 705 70274	270kΩ 5% 0402
3216	3198 031 01020	1kΩ 5% 0402
3217	3198 031 01030	10kΩ 5% 0402
3218	2122 118 06084	0.051Ω 5% 1W 2512
3219	3198 031 01030	10kΩ 5% 0402
3220	3198 039 33090	33Ω 1%
3224	2322 706 71203	12kΩ 5% 0402
3225	2322 706 71003	10kΩ 5% 0402
3226	3198 031 01030	10kΩ 5% 0402
3228	3198 021 31510	150Ω 5% 0.062W 0603
3229	3198 031 05610	560Ω 5% 0.01W 0402
3262	2322 706 71003	10kΩ 5% 0402
3263	2322 706 71003	10kΩ 5% 0402
3264	3198 031 05610	560Ω 5% 0.01W 0402
3265	3198 031 01020	1kΩ 5% 0402
3268	3198 031 01020	1kΩ 5% 0402
3269	3198 031 02720	2.7kΩ 5% 0.01W 0402
3270	3198 039 15010	150Ω 1%
3271	3198 039 15010	150Ω 1%
3292	3198 021 35610	560Ω 5% 0.062W 0603
3300	2322 706 72204	220kΩ 5% 0402
3301	2322 706 72204	220kΩ 5% 0402
3304	3198 021 31020	1kΩ 5% 0.062W 0603
3306	2322 706 71003	10kΩ 5% 0402
3307	2322 704 61203	12kΩ 1% 0603
3308	3198 021 31020	1kΩ 5% 0.062W 0603
3311	2322 734 62204	220kΩ 1% 0805
3312	3198 021 31020	1kΩ 5% 0.062W 0603
3313	2322 704 67502	7.5kΩ 1% 0.5W
3317	2322 704 67502	7.5kΩ 1% 0.5W
3318	3198 031 01030	10kΩ 5% 0402
3319	3198 031 01030	10kΩ 5% 0402
3320	2322 706 71003	10kΩ 5% 0402
3321	3198 021 31020	1kΩ 5% 0.062W 0603
3322	2322 706 73902	3.9kΩ 1% 0402
3323	2322 706 71003	10kΩ 5% 0402
3324	3198 021 31020	1kΩ 5% 0.062W 0603
3325	3198 021 34710	470Ω 5% 0603
3326	3198 031 04720	4.7kΩ 5% 0402
3327	3198 031 01030	10kΩ 5% 0402
3328	3198 021 31030	10kΩ 5% 0.062W 0603
3329	3198 031 01030	10kΩ 5% 0402
3330	3198 031 04740	470kΩ 5% 0402
3332	2322 706 76803	68kΩ 5% 0402
3333	3198 021 31020	1kΩ 5% 0.062W 0603
3334	2322 706 71003	10kΩ 5% 0402
3335	2322 706 71503	15kΩ 5% 1W 0402
3340	3198 021 31020	1kΩ 5% 0.062W 0603
3341	3198 031 01030	10kΩ 5% 0402
3342	3198 021 31030	10kΩ 5% 0.062W 0603
3343	3198 021 31020	1kΩ 5% 0.062W 0603
3344	3198 021 31020	1kΩ 5% 0.062W 0603
3345	3198 031 01020	1kΩ 5% 0402
3346	3198 031 01020	1kΩ 5% 0402
3347	3198 021 33310	330Ω 5% 0.062W 0603
3348	3198 021 33310	330Ω 5% 0.062W 0603
3349	3198 021 31020	1kΩ 5% 0.062W 0603
3350	3198 021 34720	4.7kΩ 5% 0603
3351	3198 021 31030	10kΩ 5% 0.062W 0603
3352	3198 021 31030	10kΩ 5% 0.062W 0603
3353	3198 031 01030	10kΩ 5% 0402
3354	3198 031 04720	4.7kΩ 5% 0402
3356	3198 031 05610	560Ω 5% 0.01W 0402
3358	3198 021 32220	2.2kΩ 5% 0603
3359	3198 031 05620	5.6kΩ 5% 0.01W 0402
3360	3198 031 01220	1.2kΩ 5% 0.01W 0402
3361	3198 031 04720	4.7kΩ 5% 0402
3362	3198 031 02720	2.7kΩ 5% 0.01W 0402
3363	3198 021 31020	1kΩ 5% 0.062W 0603
3364	3198 021 32720	2.7kΩ 5% 0603
3366	3198 031 01030	10kΩ 5% 0402
3367	3198 021 31030	10kΩ 5% 0.062W 0603
3369	3198 031 04720	4.7kΩ 5% 0402
3370	2322 675 20907	PTC 470Ω 50% 25V 0805
3373	3198 031 04720	4.7kΩ 5% 0402
3374	3198 031 04730	47Ω 5% 0402
3376	3198 031 04730	47Ω 5% 0402
3377	3198 031 04720	4.7kΩ 5% 0402
3378	3198 031 01030	10kΩ 5% 0402
3380	3198 031 04730	47Ω 5% 0402
3381	3198 031 04730	47Ω 5% 0402
3383	3198 031 01030	10kΩ 5% 0402
3384	3198 031 01030	10kΩ 5% 0402
3386	3198 021 31010	100Ω 5% 0.062W 0603
3388	3198 021 31020	1kΩ 5% 0.062W 0603
3389	3198 021 31020	1kΩ 5% 0.062W 0603
3390	3198 031 01020	1kΩ 5% 0402
3391	3198 031 01030	10kΩ 5% 0402
3392	3198 031 04730	47Ω 5% 0402
3393	3198 031 04730	47Ω 5% 0402
3394	3198 031 04730	47Ω 5% 0402
3395	3198 031 01540	150kΩ 5% 0402
3397	3198 031 04730	47Ω 5% 0402
3398	3198 031 04730	47Ω 5% 0402
3399	3198 031 05620	5.6kΩ 5% 0.01W 0402
3400	2322 595 90022	VDR 1mA/612V 1120V
3401	2322 242 13105	1MΩ 5%
3404	3198 013 02210	220Ω 20% 0.5W
3450	2322 662 93131	PTC 10Ω
3451	2322 662 93131	PTC 10Ω
3452	2122 612 00068	NTC 1Ω 20% 6W
3460	3198 031 02220	2.2kΩ 5% 0402
3461	3198 031 01030	10kΩ 5% 0402
3463	3198 031 01030	10kΩ 5% 0402
3465	3198 031 01030	10kΩ 5% 0402
3467	3198 031 01030	10kΩ 5% 0402
3469	3198 031 04720	4.7kΩ 5% 0402
3470	3198 031 01030	10kΩ 5% 0402
3471	3198 031 01020	1kΩ 5% 0402
3472	3198 031 01020	1kΩ 5% 0402
3501	3198 021 31020	1kΩ 5% 0.062W 0603
3502	3198 021 34710	470Ω 5% 0603
3503	2322 706 74702	4.7kΩ 5% 0402
3504	2322 706 73303	33kΩ 5% 0402
3505	2322 706 74702	4.7kΩ 5% 0402
3506	2322 662 93131	PTC 10Ω
3507	3198 021 56840	680kΩ 5% 0805
3508	3198 012 26880	6Ω8 5% 2W
3509	3198 039 12090	12Ω 1%
3603	3198 021 54740	470kΩ 5% 0805
3604	3198 021 54740	470kΩ 5% 0805
3605	3198 021 54740	470kΩ 5% 0805
3606	3198 021 31010	100Ω 5% 0.062W 0603
3607	3198 021 32240	220kΩ 5% 0603
3608	3198 039 12090	12Ω 1%
3609	3198 021 54740	470kΩ 5% 0805
3610	3198 039 33080	3.3Ω 1%
3611	3198 039 10030	10kΩ 1%
3613	3198 031 01030	10kΩ 5% 0402
3614	2322 194 95001	0.27Ω 5% 2W
3615	2322 194 95001	0.27Ω 5% 2W
3616	3198 031 01230	12kΩ 5% 0402
3617	3198 031 04730	47Ω 5% 0402
3618	3198 031 03330	33kΩ 5% 0402
3619	3198 031 03320	3.3kΩ 5% 0402
3620	2322 194 95001	0.27Ω 5% 2W
3621	3198 039 22080	2.2Ω 1%
3622	3198 039 22080	2.2Ω 1%
3623	3198 031 01020	1kΩ 5% 0402
3639	3198 021 51020	1kΩ 5% 0805
3640	3198 021 33310	330Ω 5% 0.062W 0603
3641	3198 021 54710	470Ω 5% 0805

3642	3198 021 52210	220Ω 5% 0805
3643	3198 021 52210	220Ω 5% 0805
3651	3198 031 02230	22kΩ 5% 0402
3652	3198 031 01050	1MΩ 5% 0402
3654	3198 031 01030	10kΩ 5% 0402
3655	3198 031 01020	1kΩ 5% 0402
3656	3198 031 01820	1.8kΩ 5% 0.01W 0402
3659	3198 021 52210	220Ω 5% 0805
3660	3198 021 52710	270Ω 5% 0805
3661	3198 021 52710	270Ω 5% 0805
3663	2306 204 03108	Fuse NFR25 1Ω
3664	2322 706 71204	120kΩ 5% 0402
3665	2322 705 70274	270kΩ 5% 0402
3666	3198 021 31010	100Ω 5% 0.062W 0603
3668	2306 207 03102	1kΩ 5%
3669	2322 706 71204	120kΩ 5% 0402
3671	2322 706 71003	10kΩ 5% 0402
3673	2306 207 03102	1kΩ 5%
3675	2322 702 60158	1.5Ω
3676	2322 706 74702	4.7kΩ 5% 0402
3677	2322 706 74703	47kΩ 1% 0402
3678	3198 031 04730	47Ω 5% 0402
3679	2322 734 61504	150kΩ 1% 0805
3680	2322 734 62204	220kΩ 1% 0805
3681	2322 734 62204	220kΩ 1% 0805
3682	2322 734 62204	220kΩ 1% 0805
3683	3198 021 53340	330kΩ 5% 0805
3684	3198 021 53340	330kΩ 5% 0805
3685	3198 021 53340	330kΩ 5% 0805
3686	3198 021 31590	15Ω 5% 0.062W 0603
3690	3198 031 03920	3.9kΩ 5% 0402
3691	3198 031 08220	8.2kΩ 5% 0.5W
3692	3198 031 01030	10kΩ 5% 0402
3693	3198 031 02220	2.2kΩ 5% 0402
3806	3198 031 04710	470Ω 5% 0402
3807	3198 031 01030	10kΩ 5% 0402
3808	3198 031 01030	10kΩ 5% 0402
3809	3198 031 02730	27kΩ 5% 0402
3811	3198 031 01010	1Ω 5% 0402
3999	3198 031 01020	1kΩ 5% 0402
9001	3198 021 90020	Jumper 0805
9002	3198 036 90010	Wire 0.58mm
9003	3198 021 90030	Jumper 0603
9004	3198 021 90030	Jumper 0603
9009	3198 036 90010	Wire 0.58mm
9020	3198 021 90020	Jumper 0805
9028	3198 031 90010	Jumper 0402

5001	2422 531 02444	S13932-04Y
5002	3104 308 21022	BS42315-02
5004	3104 308 21022	BS42315-02
5005	3104 308 20922	DMF2807 7MHz 20A
5121	3104 308 20771	Bridge coil BD21232-00
5220	3104 308 20912	BS29238-01
5225	2422 536 00672	4.7µH 20%
5229	2422 536 00826	220µH 10%
5260	3198 018 71010	100µF 10%
5268	2422 536 00288	100µH 10%
5290	3104 308 21171	BD15403-00
5291	3198 018 72290	22µH 10%
5292	3198 018 72290	22µH 10%
5293	3198 018 72290	22µH 10%
5401	3104 308 20922	DMF2807 7MHz 20A
5402	3104 308 20922	DMF2807 7MHz 20A
5500	2422 531 00102	BS16510-01
5503	3198 018 71090	10 10%
5600	3104 308 20822	BS42228-02
5601	3198 018 90020	Bead 80Ω at 100MHz
5612	3198 018 90020	Bead 80Ω at 100MHz
5660	3198 018 22210	220H 10%

6002	3198 010 10630	BAS316
6003	3198 020 53390	BZX384C33
6004	3198 010 10630	BAS316
6005	3198 010 10630	BAS316
6006	3198 010 10630	BAS316
6007	3198 010 10630	BAS316
6008	3198 010 10630	BAS316
6009	3198 010 10630	BAS316
6010	3198 010 10630	BAS316
6011	3198 010 10630	BAS316
6012	3198 020 55680	BZX384-C5V6
6018	3198 010 10630	BAS316
6019	3198 010 10630	BAS316
6021	3198 010 10740	BYV28-200
6023	3198 010 10630	BAS316
6027	3198 010 10630	BAS316
6028	3198 010 10630	BAS316
6029	3198 020 56880	BZX384-C6V8
6031	3198 020 55680	BZX384-C5V6
6032	3198 020 55680	BZX384-C5V6
6033	9340 576 56115	BZX384-C47
6034	3198 010 10630	BAS316
6035	3198 010 10630	BAS316
6042	9340 576 56115	BZX384-C47
6044	9322 202 88687	STTH2003CFP
6045	3198 010 10740	BYV28-200
6050	3198 020 51890	BZX384-C18
6054	9340 553 52115	BAS321
6055	9340 553 52115	BAS321
6061	3198 020 51890	BZX384-C18
6062	3198 020 51890	BZX384-C18
6075	9322 213 87685	BZG03C270
6077	9322 213 87685	BZG03C270
6086	3198 010 10630	BAS316
6111	9340 553 52115	BAS321
6112	9340 553 52115	BAS321
6113	3198 010 10630	BAS316
6114	3198 020 56880	BZX384-C6V8
6117	3198 020 51890	BZX384-C18
6120	9322 250 24687	STTH802FP
6123	3198 010 10630	BAS316
6133	3198 010 10630	BAS316
6134	3198 010 10630	BAS316
6142	9322 192 15668	SM S3J
6201	3198 020 55680	BZX384-C5V6
6202	3198 010 10630	BAS316
6204	3198 020 55680	BZX384-C5V6
6205	3198 020 51890	BZX384-C18
6206	3198 010 10630	BAS316
6211	9322 202 55685	BYG22D
6213	3198 010 10630	BAS316
6216	3198 020 51890	BZX384-C18
6225	9322 173 47687	STPS20L40CFP
6230	9322 082 82668	SS34
6267	9322 161 77682	SB540L-7024
6269	9322 099 61685	BYG10J
6270	9322 099 61685	BYG10J
6291	9322 199 41687	STPS8H100FP
6292	9322 199 41687	STPS8H100FP
6312	3198 010 10660	BAT54
6313	3198 010 10660	BAT54
6321	3198 010 10660	BAT54
6322	3198 010 10660	BAT54
6325	3198 020 56880	BZX384-C6V8
6333	3198 010 10660	BAT54
6334	3198 010 10660	BAT54
6335	3198 010 10630	BAS316
6340	3198 010 10660	BAT54
6341	3198 010 10660	BAT54
6344	3198 020 53380	BZX384-C3V3
6347	3198 010 10660	BAT54
6362	3198 010 10630	BAS316
6364	3198 010 10630	BAS316
6365	3198 010 10630	BAS316
6366	3198 010 10630	BAS316
6367	3198 010 10630	BAS316
6375	3198 010 10630	BAS316
6376	3198 010 10630	BAS316
6378	3198 010 10660	BAT54
6460	3198 010 10630	BAS316
6461	3198 010 10630	BAS316
6470	3198 010 10630	BAS316
6471	3198 010 10630	BAS316
6501	9322 218 64673	BZT03C200
6502	9322 218 64673	BZT03C200
6503	9322 176 76668	RS1J
6504	9322 176 76668	RS1J
6505	9322 082 82668	SS34
6506	9322 218 64673	BZT03C200
6507	9322 082 82668	SS34
6508	9322 128 69685	S1D
6510	9322 099 61685	BYG10J
6511	9322 099 61685	BYG10J
6512	9322 099 61685	BYG10J
6513	9322 099 61685	BYG10J
6600	9322 177 84667	GBU8JL-7014
6601	9340 576 54115	BZX384-C39
6602	3198 020 51590	BZX384C15
6605	9322 192 15668	SM S3J
6606	9322 192 15668	SM S3J
6608	3198 010 10710	SS14
6609	9322 208 81685	BZG05C18
6611	9340 555 59127	BYV29X500
6640	3198 010 10710	SS14
6641	3198 010 10630	BAS316
6642	3198 010 10710	SS14
6643	3198 020 51890	BZX384-C18
6651	3198 010 10660	BAT54
6652	3198 010 10710	SS14
6653	3198 020 58280	BZX384-C8V2
6654	3198 010 10630	BAS316
6660	9322 202 55685	BYG22D
6661	9322 202 55685	BYG22D
6663	9322 198 81685	SL04
6665	9322 198 81685	SL04
6666	9340 548 57115	PDZ8.2B

7001	9322 108 21682	MC34067P
7002	9322 149 04682	TCET1102
7003	9322 149 04682	TCET1102
7004	9322 192 17685	P0102BL
7005	9322 192 18687	STP15NK50ZFP
7006	9322 192 18687	STP15NK50ZFP
7007	3198 020 43430	BC327-25
7008	3198 020 43430	BC327-25
7009	3198 010 42310	BC847BW
7010	9322 192 16685	TS2431AI
7011	9322 192 16685	TS2431AI
7012	3198 010 42310	BC847BW
7013	9339 172 40115	BCP56
7017	3198 010 42320	BC857BW
7018	3198 010 42310	BC847BW
7020	9335 671 30126	BC517
7021	9335 671 30126	BC517
7042	9340 308 50135	PMST5401
7050	9322 241 13687	SUP85N15-21-E3
7050	9340 557 16127	PSMN035-150P
7052	9322 237 50668	SUD25N15-52-E3
7052	9340 557 58118	PSMN063-150D
7058	3198 010 42310	BC847BW
7059	9340 308 60135	PMST5550
7090	3198 010 42320	BC857BW
7091	3198 010 42320	BC857BW
7092	3198 010 44350	BC807-25W
7093	3198 010 70590	LM317T
7110	9340 308 50135	PMST5401
7112	9352 673 56112	TEA1507p/N1
7117	9340 557 17118	PSMN035-150B
7120	9322 149 04682	TCET1102
7121	9322 192 16685	TS2431AI
7130	9322 192 16685	TS2431AI
7134	3198 010 42310	BC847BW
7200	9322 235 99685	SI2328DS-E3
7200	9340 565 06215	BSH114
7202	9322 235 98685	FET POW SM 2N7002
7202	9340 125 00235	BSN20
7212	9352 673 56112	TEA1507p/N1
7217	9340 557 18127	PSMN070-200P
7220	9322 149 04682	TCET1102
7227	9322 192 16685	TS2431AI
7230	9322 205 64687	L4940P85
7260	9322 166 31682	L4973V3.3
7304	9322 192 16685	TS2431AI
7308	9322 213 16668	LM339PW
7308	9322 213 35668	LM339P
7326	3198 010 42310	BC847BW
7327	3198 010 42310	BC847BW
7330	9322 213 16668	LM339PW
7330	9322 213 35668	LM339P
7341	3198 010 42320	BC857BW
7348	3198 010 42310	BC847BW
7351	3198 010 42310	BC847BW
7352	3198 010 42310	BC847BW
7362	3198 010 42310	BC847BW
7363	3198 010 42310	BC847BW
7364	3198 010 42310	BC847BW
7365	3198 010 42310	BC847BW
7366	9322 185 74668	LM324P
7366	9322 213 19668	LM324APW
7375	3198 010 42310	BC847BW
7376	3198 010 42310	BC847BW
7391	3198 010 42320	BC857BW
7460	3198 010 44340	BC817-25W
7461	9336 787 80115	BC869
7465	3198 010 42320	BC857BW
7470	3198 010 44340	BC817-25W
7500	9322 037 99682	TNY256P
7501	9322 149 04682	TCET1102
7502	9322 192 16685	TS2431AI
7540	9322 134 45668	LD1117DT33
7601	3198 010 42310	BC847BW
7602	3198 010 42320	BC857BW
7608	3198 010 40170	BC369
7610	9322 223 21687	STW29NK50Z
7640	9322 235 98685	2N7002
7640	9340 125 00235	BSN20
7641	3198 010 44340	BC817-25W
7650	9322 130 69682	MC33368P
7654	3198 010 42320	BC857BW
7655	3198 010 42310	BC847BW
7656	3198 010 42310	BC847BW
7661	9322 033 40668	MC34063ADG

Small Signal Board [B]

Software

0801	3139 127 07221	SW Hercules
0811	3139 127 07211	SW Genesis
0821	3139 127 07001	SW HDMI-1 DDC
0822	3139 127 06991	SW HDMI-2 DDC

Various

1062	2422 549 00148	Socket 3p m
1062	2422 549 00151	Socket 3p m
1119	3139 267 22741	OTC Flash SD2.1 assy
1151	2422 025 18749	Connector 3p m
1152	3139 147 19801	Tuner UV1318S/A IH -3
1154	4822 242 81436	Filter OFWK3953M
1156	2422 549 44341	38.9MHz OFWK9656M
1177	2422 025 18749	Connector 3p m
1202	2422 543 01414	Xtal 24.576MHz
1442	2422 025 19085	Connector 14p m
1801	2422 543 01133	Xtal 14.32MHz 20pF
1F01	2422 026 05647	Cinch 2P F 2L1
1F02	2422 033 00505	Socket HDMI 19p f
1F03	2422 033 00505	Socket HDMI 19p f
1G01	2422 025 19508	Combi 3X Cinch/SCART
1G02	2422 025 19509	Combi 2X Cinch/SCART
1J00	2422 025 10771	Connector 10p m
1J01	2422 025 10655	Connector 11p m
1J04	2422 025 10769	Connector 9p m
1J07	2422 086 11081	Fuse T3A 125V
1J08	2422 549 45333	Bead 120Ω at 100MHz
1K00	2422 025 08149	Connector 6p m
1K02	2422 025 10768	Connector 3p m
1K04	2422 025 10655	Connector 11p m
1L35	2422 543 01133	Xtal 14.32MHz 20pF
1N02	2422 540 00017	Reson. 60MHz CSTCW
1N11	2422 549 45325	Bead 67Ω at 100MHz
1N12	2422 549 45325	Bead 67Ω at 100MHz
1N13	2422 549 45325	Bead 67Ω at 100MHz
1N14	2422 549 45325	Bead 67Ω at 100MHz
1N15	2422 549 45325	Bead 67Ω at 100MHz
1N17	2422 025 18427	Connector 31p f
8000	3139 131 07211	Cable 14p/180/14p
8321	3104 311 08731	Cable POSI/100/POSI
8322	3104 311 07391	Cable 10p/220/10p
8337	3104 311 08621	Cable 11p/220/11p

⊣⊢

2151	4822 124 12095	100µF 20% 16V
2152	5322 126 11583	10nF 10% 50V 0603
2153	5322 126 11583	10nF 10% 50V 0603
2154	4822 122 33761	22pF 5% 50V
2155	4822 122 33761	22pF 5% 50V
2156	5322 126 11583	10nF 10% 50V 0603
2157	3198 024 44730	47nF 50V 0603
2159	5322 124 41945	22µF 20% 35V
2160	4822 124 12095	100µF 20% 16V
2204	2020 012 00029	330µF 6.3V
2207	2020 552 96718	220nF 10% 6.3V 0402
2208	4822 124 12084	1µF 20% 50V
2210	2020 552 96718	220nF 10% 6.3V 0402
2211	2020 552 96628	10nF 10% 16V 0402
2212	3198 035 71040	100nF 10% 16V 0402
2214	3198 035 03310	330pF 5% 50V 0402
2216	3198 035 03310	330pF 5% 50V 0402
2218	3198 035 71040	100nF 10% 16V 0402
2221	4822 124 12095	100µF 20% 16V
2222	2020 012 00029	330µF 6.3V
2223	2238 869 15101	100pF 5% 50V 0402
2225	2020 552 96618	1nF 10% 50V 0402
2226	3198 035 03320	3.3nF 5% 50V 0402
2227	2020 552 96618	1nF 10% 50V 0402
2228	3198 035 71040	100nF 10% 16V 0402
2230	3198 035 71040	100nF 10% 16V 0402
2231	2020 552 96718	220nF 10% 6.3V 0402
2232	3198 035 71040	100nF 10% 16V 0402
2233	4822 124 23002	10µF 16V
2234	2020 552 96718	220nF 10% 6.3V 0402
2235	2020 552 96718	220nF 10% 6.3V 0402
2236	4822 126 14076	220nF +80/-20% 25V
2237	2020 552 96718	220nF 10% 6.3V 0402
2238	2020 552 96718	220nF 10% 6.3V 0402
2239	3198 035 71040	100nF 10% 16V 0402
2240	2020 552 96718	220nF 10% 6.3V 0402
2241	2020 552 96718	220nF 10% 6.3V 0402
2242	3198 035 71040	100nF 10% 16V 0402
2243	4822 124 23002	10µF 16V
2244	3198 035 71040	100nF 10% 16V 0402
2245	3198 035 71040	100nF 10% 16V 0402
2246	3198 035 71040	100nF 10% 16V 0402
2250	2020 552 96618	1nF 10% 50V 0402
2251	2020 552 96656	10µF 20% 25V 1210
2252	3198 035 71040	100nF 10% 16V 0402
2253	3198 035 71040	100nF 10% 16V 0402
2254	3198 035 71040	100nF 10% 16V 0402
2255	3198 035 71040	100nF 10% 16V 0402
2256	4822 124 23002	10µF 16V
2257	3198 035 71040	100nF 10% 16V 0402
2258	2020 552 96637	10µF 10% 6.3V 0805
2259	3198 035 71040	100nF 10% 16V 0402
2260	2020 552 96637	10µF 10% 6.3V 0805
2262	4822 124 23002	10µF 16V
2263	3198 035 26820	6.8nF 10% 16V 0402
2264	2022 020 00762	0.47µ 20% 50V
2264	3198 017 44740	470nF 10V 0603
2265	3198 017 41050	1µF 10V 0603
2265	4822 124 12084	1µF 20% 50V
2266	3198 035 71040	100nF 10% 16V 0402
2267	2020 552 96718	220nF 10% 6.3V 0402
2269	2022 031 00373	470µF 20% 16V
2270	3198 035 71040	100nF 10% 16V 0402
2271	4822 124 12095	100µF 20% 16V
2272	3198 035 71040	100nF 10% 16V 0402
2273	2020 552 96718	220nF 10% 6.3V 0402
2274	3198 017 31540	150nF 10V 0603
2277	3198 035 71040	100nF 10% 16V 0402
2280	2020 552 00005	4.7µF 10% 6.3V 0603
2281	2020 552 00005	4.7µF 10% 6.3V 0603
2285	3198 035 71040	100nF 10% 16V 0402
2286	3198 035 71040	100nF 10% 16V 0402
2290	2020 552 96305	4.7µF 20-80% 10V
2291	3198 035 71040	100nF 10% 16V 0402
2449	3198 035 71040	100nF 10% 16V 0402
2501	3198 035 71040	100nF 10% 16V 0402
2502	3198 035 71040	100nF 10% 16V 0402
2503	3198 035 71040	100nF 10% 16V 0402
2504	3198 035 71040	100nF 10% 16V 0402
2505	3198 035 71040	100nF 10% 16V 0402
2506	3198 035 03310	330pF 5% 50V 0402
2507	3198 035 04710	470pF 50V 0402
2508	2238 869 15829	82pF 5% 50V 0402
2509	2238 869 15829	82pF 5% 50V 0402
2603	2020 552 96834	1µF 20% 6.3V 0402
2604	3198 035 04710	470pF 50V 0402
2605	2020 552 96834	1µF 20% 6.3V 0402
2608	2020 552 96834	1µF 20% 6.3V 0402
2609	3198 035 04710	470pF 50V 0402
2610	2020 552 96834	1µF 20% 6.3V 0402
2611	4822 124 12095	100µF 20% 16V
2612	3198 017 41050	1µF 10V 0603
2614	3198 035 71040	100nF 10% 16V 0402
2615	2022 031 00373	470µF 20% 16V
2618	2022 031 00373	470µF 20% 16V
2702	3198 035 71040	100nF 10% 16V 0402
2704	4822 124 23002	10µF 16V
2706	4822 124 23002	10µF 16V
2709	4822 124 80151	47µF 16V
2710	2020 552 00231	22µF 20%
2711	2020 552 00231	22µF 20%
2716	2020 012 00028	470µF 20% 16V
2717	3198 035 71040	100nF 10% 16V 0402
2718	3198 035 71040	100nF 10% 16V 0402
2719	3198 035 71040	100nF 10% 16V 0402
2720	2020 552 96618	1nF 10% 50V 0402
2721	3198 035 71040	100nF 10% 16V 0402
2722	2020 552 96618	1nF 10% 50V 0402
2723	3198 035 74730	47nF 5% 16V 0402
2724	3198 016 31020	1nF 25V 0603
2725	3198 016 31020	1nF 25V 0603
2726	2022 031 00373	470µF 20% 16V
2727	2020 552 96628	10nF 10% 16V 0402
2730	2020 552 00231	22µF 20%
2731	2022 031 00373	470µF 20% 16V
2733	3198 035 02210	220pF 5% 50V 0402
2734	2238 787 15641	22nF 5% 16V 0402
2735	3198 035 06810	680pF 5% 50V 0402
2736	2022 031 00308	22µF 20% 35V
2737	2022 031 00373	470µF 20% 16V
2738	4822 124 80151	47µF 16V
2739	4822 124 80151	47µF 16V
2741	4822 126 13879	220nF +80-20% 16V
2758	2022 031 00373	470µF 20% 16V
2800	2020 021 91557	100µF 20% 16V
2801	3198 035 71040	100nF 10% 16V 0402
2802	3198 035 71040	100nF 10% 16V 0402
2803	3198 035 71040	100nF 10% 16V 0402
2804	3198 035 71040	100nF 10% 16V 0402
2805	3198 035 71040	100nF 10% 16V 0402
2806	3198 035 71040	100nF 10% 16V 0402
2807	3198 035 71040	100nF 10% 16V 0402
2808	3198 035 71040	100nF 10% 16V 0402
2809	3198 035 71040	100nF 10% 16V 0402
2810	3198 035 71040	100nF 10% 16V 0402
2811	3198 035 71040	100nF 10% 16V 0402
2812	3198 035 71040	100nF 10% 16V 0402
2813	3198 035 71040	100nF 10% 16V 0402
2814	3198 035 71040	100nF 10% 16V 0402
2815	5322 124 41945	22µF 20% 35V
2816	3198 035 71040	100nF 10% 16V 0402
2817	3198 035 71040	100nF 10% 16V 0402
2818	3198 035 71040	100nF 10% 16V 0402
2819	3198 035 71040	100nF 10% 16V 0402
2820	3198 035 71040	100nF 10% 16V 0402
2821	3198 035 71040	100nF 10% 16V 0402
2822	3198 035 71040	100nF 10% 16V 0402
2823	4822 126 14519	22pF 5% 50V 0402
2824	4822 126 14519	22pF 5% 50V 0402
2900	3198 035 71040	100nF 10% 16V 0402
2901	2020 552 96618	1nF 10% 50V 0402
2902	2020 021 91557	100µF 20% 16V
2903	3198 035 71040	100nF 10% 16V 0402
2904	4822 124 80151	47µF 16V
2905	2020 021 91557	100µF 20% 16V
2906	3198 035 71040	100nF 10% 16V 0402
2907	3198 035 71040	100nF 10% 16V 0402
2908	3198 035 71040	100nF 10% 16V 0402
2909	3198 035 71040	100nF 10% 16V 0402
2910	3198 035 71040	100nF 10% 16V 0402
2911	3198 035 71040	100nF 10% 16V 0402
2912	3198 035 71040	100nF 10% 16V 0402
2913	3198 035 71040	100nF 10% 16V 0402
2914	3198 035 71040	100nF 10% 16V 0402
2915	3198 035 71040	100nF 10% 16V 0402
2916	3198 035 71040	100nF 10% 16V 0402
2917	2020 021 91557	100µF 20% 16V
2918	3198 035 71040	100nF 10% 16V 0402
2919	3198 035 71040	100nF 10% 16V 0402
2920	3198 035 71040	100nF 10% 16V 0402
2921	3198 035 71040	100nF 10% 16V 0402
2922	3198 035 71040	100nF 10% 16V 0402
2923	3198 035 71040	100nF 10% 16V 0402
2924	3198 035 71040	100nF 10% 16V 0402
2925	3198 035 71040	100nF 10% 16V 0402
2926	3198 035 71040	100nF 10% 16V 0402
2927	3198 035 71040	100nF 10% 16V 0402
2928	3198 035 71040	100nF 10% 16V 0402
2929	3198 035 71040	100nF 10% 16V 0402
2930	3198 035 71040	100nF 10% 16V 0402
2931	3198 035 71040	100nF 10% 16V 0402
2932	3198 035 71040	100nF 10% 16V 0402
2933	3198 035 71040	100nF 10% 16V 0402
2934	4822 124 80151	47µF 16V
2935	3198 035 71040	100nF 10% 16V 0402
2936	3198 035 71040	100nF 10% 16V 0402
2937	3198 035 71040	100nF 10% 16V 0402
2938	3198 035 71040	100nF 10% 16V 0402
2939	3198 035 71040	100nF 10% 16V 0402
2940	4822 124 80151	47µF 16V
2941	3198 035 71040	100nF 10% 16V 0402
2942	3198 035 71040	100nF 10% 16V 0402
2945	5322 124 41945	22µF 20% 35V
2946	3198 035 71040	100nF 10% 16V 0402
2947	3198 035 71040	100nF 10% 16V 0402
2948	3198 035 71040	100nF 10% 16V 0402
2949	3198 035 71040	100nF 10% 16V 0402
2950	5322 124 41945	22µF 20% 35V
2951	3198 035 71040	100nF 10% 16V 0402
2952	3198 035 71040	100nF 10% 16V 0402
2953	3198 035 71040	100nF 10% 16V 0402
2954	3198 035 71040	100nF 10% 16V 0402
2955	5322 124 41945	22µF 20% 35V
2956	3198 035 71040	100nF 10% 16V 0402
2957	3198 035 71040	100nF 10% 16V 0402
2958	3198 035 71040	100nF 10% 16V 0402
2959	3198 035 71040	100nF 10% 16V 0402
2960	2020 021 91557	100µF 20% 16V
2A12	2020 552 96628	10nF 10% 16V 0402
2A13	3198 035 71040	100nF 10% 16V 0402
2B01	4822 124 80151	47µF 16V
2B02	4822 124 11131	47µF 6.3V
2B03	3198 035 71040	100nF 10% 16V 0402
2B04	3198 035 71040	100nF 10% 16V 0402
2B05	3198 035 71040	100nF 10% 16V 0402
2B06	3198 035 71040	100nF 10% 16V 0402
2B07	3198 035 71040	100nF 10% 16V 0402
2B08	3198 035 71040	100nF 10% 16V 0402
2B09	3198 035 71040	100nF 10% 16V 0402
2B10	3198 035 71040	100nF 10% 16V 0402
2B11	3198 035 71040	100nF 10% 16V 0402
2B12	3198 035 71040	100nF 10% 16V 0402
2B13	3198 035 71040	100nF 10% 16V 0402
2B14	3198 035 71040	100nF 10% 16V 0402
2B15	3198 035 71040	100nF 10% 16V 0402
2B16	3198 035 71040	100nF 10% 16V 0402
2B17	3198 035 71040	100nF 10% 16V 0402
2B18	5322 124 41945	22µF 20% 35V
2C00	3198 035 71040	100nF 10% 16V 0402

2C01	4822 124 23002	10µF 16V
2C02	3198 035 71040	100nF 10% 16V 0402
2C03	3198 035 71040	100nF 10% 16V 0402
2C04	2020 552 96628	10nF 10% 16V 0402
2C05	2020 552 96628	10nF 10% 16V 0402
2D00	3198 035 71040	100nF 10% 16V 0402
2D01	3198 035 71040	100nF 10% 16V 0402
2D02	4822 124 23237	22µF 6.3V
2D08	2020 552 96618	1nF 10% 50V 0402
2D09	2020 552 96618	1nF 10% 50V 0402
2D10	2020 552 96618	1nF 10% 50V 0402
2D11	2020 552 96618	1nF 10% 50V 0402
2D12	2020 552 96618	1nF 10% 50V 0402
2D13	2020 552 96618	1nF 10% 50V 0402
2D14	2020 552 96618	1nF 10% 50V 0402
2D15	2020 552 96618	1nF 10% 50V 0402
2D16	2020 552 96618	1nF 10% 50V 0402
2D17	2020 552 96618	1nF 10% 50V 0402
2D18	2020 552 96618	1nF 10% 50V 0402
2D21	2020 552 96618	1nF 10% 50V 0402
2D22	3198 035 71040	100nF 10% 16V 0402
2D23	2020 552 96618	1nF 10% 50V 0402
2D24	2020 552 96618	1nF 10% 50V 0402
2D25	3198 035 71040	100nF 10% 16V 0402
2D29	2020 552 96618	1nF 10% 50V 0402
2D30	2020 552 96618	1nF 10% 50V 0402
2D31	2020 552 96618	1nF 10% 50V 0402
2D32	2020 552 96618	1nF 10% 50V 0402
2D34	2020 552 96618	1nF 10% 50V 0402
2D35	2020 552 96618	1nF 10% 50V 0402
2D36	2020 552 96618	1nF 10% 50V 0402
2D37	2020 552 96618	1nF 10% 50V 0402
2D38	2020 552 96618	1nF 10% 50V 0402
2D39	2020 552 96618	1nF 10% 50V 0402
2D42	4822 124 23237	22µF 6.3V
2D43	4822 124 23237	22µF 6.3V
2D44	4822 124 23237	22µF 6.3V
2D45	3198 035 71040	100nF 10% 16V 0402
2D46	4822 124 11131	47µF 6.3V
2D47	4822 124 23237	22µF 6.3V
2D48	4822 124 23237	22µF 6.3V
2D49	2020 552 96618	1nF 10% 50V 0402
2D50	4822 124 11131	47µF 6.3V
2D51	3198 035 71040	100nF 10% 16V 0402
2D52	4822 124 11131	47µF 6.3V
2D53	3198 035 71040	100nF 10% 16V 0402
2D54	4822 124 11131	47µF 6.3V
2D55	3198 035 71040	100nF 10% 16V 0402
2D56	4822 124 23002	10µF 16V
2D57	4822 124 23002	10µF 16V
2D58	2020 552 96628	10nF 10% 16V 0402
2D59	2020 552 96628	10nF 10% 16V 0402
2E00	2020 552 00005	4.7µF 10% 6.3V 0603
2E01	2020 552 00005	4.7µF 10% 6.3V 0603
2E02	2020 552 00005	4.7µF 10% 6.3V 0603
2E03	3198 035 71040	100nF 10% 16V 0402
2E04	2020 552 00005	4.7µF 10% 6.3V 0603
2E05	2020 552 00005	4.7µF 10% 6.3V 0603
2E06	2020 552 00005	4.7µF 10% 6.3V 0603
2E07	4822 126 14324	33pF 5% 50V 0402
2E08	2020 552 00005	4.7µF 10% 6.3V 0603
2E09	4822 126 14324	33pF 5% 50V 0402
2E10	2020 552 00005	4.7µF 10% 6.3V 0603
2E11	4822 126 14324	33pF 5% 50V 0402
2E12	2020 552 00005	4.7µF 10% 6.3V 0603
2E13	3198 017 41050	1µF 10V 0603
2E14	4822 126 14324	33pF 5% 50V 0402
2E16	3198 035 71040	100nF 10% 16V 0402
2E17	3198 035 71040	100nF 10% 16V 0402
2E18	3198 035 71040	100nF 10% 16V 0402
2E19	3198 035 71040	100nF 10% 16V 0402
2E20	4822 124 11131	47µF 6.3V
2E24	3198 035 71040	100nF 10% 16V 0402
2E25	3198 035 71040	100nF 10% 16V 0402
2E26	3198 035 71040	100nF 10% 16V 0402
2E27	3198 035 71040	100nF 10% 16V 0402
2E28	3198 035 71040	100nF 10% 16V 0402
2E29	3198 035 71040	100nF 10% 16V 0402
2E30	3198 035 71040	100nF 10% 16V 0402
2E31	3198 035 71040	100nF 10% 16V 0402
2E32	3198 035 71040	100nF 10% 16V 0402
2E33	2020 552 00005	4.7µF 10% 6.3V 0603
2E34	2020 552 00005	4.7µF 10% 6.3V 0603
2E35	2020 552 00005	4.7µF 10% 6.3V 0603
2E36	3198 035 71040	100nF 10% 16V 0402
2E37	2020 552 96551	180pF 5% 25V 0402
2F01	4822 124 23002	10µF 16V
2F02	2238 586 59812	100nF 20% 50V 0603
2F03	2020 552 00005	4.7µF 10% 6.3V 0603
2F04	2020 552 00005	4.7µF 10% 6.3V 0603
2F13	4822 126 14508	180pF 5% 50V 0603
2F14	4822 126 14508	180pF 5% 50V 0603
2F15	2020 552 00183	2.2µF 10% 6.3V 0603
2F16	2020 552 00183	2.2µF 10% 6.3V 0603
2G03	4822 126 14241	330pF 0603 50V
2G04	4822 126 14241	330pF 0603 50V
2G05	4822 124 23002	10µF 16V
2G06	4822 124 23002	10µF 16V
2G09	4822 126 14508	180pF 5% 50V 0603
2G10	4822 126 14508	180pF 5% 50V 0603
2G11	2020 552 00183	2.2µF 10% 6.3V 0603
2G12	2020 552 00183	2.2µF 10% 6.3V 0603
2G16	4822 126 14508	180pF 5% 50V 0603
2G17	4822 126 14508	180pF 5% 50V 0603
2G20	4822 126 14241	330pF 0603 50V
2G21	4822 126 14241	330pF 0603 50V
2G22	4822 124 23002	10µF 16V
2G23	4822 124 23002	10µF 16V
2G24	2020 552 00183	2.2µF 10% 6.3V 0603
2G25	2020 552 00183	2.2µF 10% 6.3V 0603
2G28	4822 126 14508	180pF 5% 50V 0603
2G43	2020 552 00005	4.7µF 10% 6.3V 0603
2G47	3198 035 71040	100nF 10% 16V 0402
2G54	2020 552 00183	2.2µF 10% 6.3V 0603
2G55	2020 552 00005	4.7µF 10% 6.3V 0603
2G56	2020 552 00005	4.7µF 10% 6.3V 0603
2G57	2020 552 00005	4.7µF 10% 6.3V 0603
2G58	3198 035 71040	100nF 10% 16V 0402
2G60	2020 552 00183	2.2µF 10% 6.3V 0603
2G61	3198 017 42240	220nF 16V Y5V 0603
2G68	4822 126 14508	180pF 5% 50V 0603
2G69	4822 124 23002	10µF 16V
2G70	2020 552 96637	10µF 10% 6.3V 0805
2G71	2020 552 96637	10µF 10% 6.3V 0805
2J02	2020 552 96618	1nF 10% 50V 0402
2J03	2020 552 96618	1nF 10% 50V 0402
2J17	2020 552 96618	1nF 10% 50V 0402
2J21	2238 869 15101	100pF 5% 50V 0402
2J26	2238 869 15101	100pF 5% 50V 0402
2J27	2238 869 15101	100pF 5% 50V 0402
2J28	2238 869 15101	100pF 5% 50V 0402
2J29	2238 869 15101	100pF 5% 50V 0402
2J30	2020 552 96618	1nF 10% 50V 0402
2J31	2238 869 15101	100pF 5% 50V 0402
2J35	2020 552 96834	1µF 20% 6.3V 0402
2J36	2020 552 96618	1nF 10% 50V 0402
2K00	2020 552 96618	1nF 10% 50V 0402
2K01	2020 552 96618	1nF 10% 50V 0402
2K02	2238 869 15109	10pF 5% 50V 0402
2K03	2238 869 15109	10pF 5% 50V 0402
2K04	2238 869 15109	10pF 5% 50V 0402
2K05	2238 869 15109	10pF 5% 50V 0402
2K06	2238 869 15101	100pF 5% 50V 0402
2K07	2238 869 15101	100pF 5% 50V 0402
2K08	2020 552 00183	2.2µF 10% 6.3V 0603
2K10	2238 869 15101	100pF 5% 50V 0402
2K11	2238 869 15101	100pF 5% 50V 0402
2K12	2020 552 00183	2.2µF 10% 6.3V 0603
2K13	2238 869 15101	100pF 5% 50V 0402
2K14	2238 869 15101	100pF 5% 50V 0402
2K16	2238 869 15101	100pF 5% 50V 0402
2K17	2238 869 15101	100pF 5% 50V 0402
2K18	2238 869 15101	100pF 5% 50V 0402
2K19	2020 552 96618	1nF 10% 50V 0402
2K20	2020 552 96618	1nF 10% 50V 0402
2K21	2238 869 15101	100pF 5% 50V 0402
2K22	2238 869 15101	100pF 5% 50V 0402
2K23	2238 869 15101	100pF 5% 50V 0402
2K25	2238 869 15101	100pF 5% 50V 0402
2K26	2238 869 15101	100pF 5% 50V 0402
2K27	2238 869 15101	100pF 5% 50V 0402
2L01	4822 124 23002	10µF 16V
2L02	4822 124 23002	10µF 16V
2L03	2020 552 96834	1µF 20% 6.3V 0402
2L04	2020 552 96834	1µF 20% 6.3V 0402
2L05	2020 552 96834	1µF 20% 6.3V 0402
2L06	2020 552 96834	1µF 20% 6.3V 0402
2L07	2020 552 96834	1µF 20% 6.3V 0402
2L08	2020 552 96834	1µF 20% 6.3V 0402
2L09	2020 552 96834	1µF 20% 6.3V 0402
2L10	2020 552 96668	560P 10% 50V
2L11	4822 124 23002	10µF 16V
2L12	2020 552 96834	1µF 20% 6.3V 0402
2L13	2020 552 96834	1µF 20% 6.3V 0402
2L14	2020 552 96834	1µF 20% 6.3V 0402
2L15	2020 552 96834	1µF 20% 6.3V 0402
2L16	2020 552 96834	1µF 20% 6.3V 0402
2L17	2020 552 96637	10µF 10% 6.3V 0805
2L18	2020 552 96834	1µF 20% 6.3V 0402
2L19	2020 552 96637	10µF 10% 6.3V 0805
2L20	2020 552 96834	1µF 20% 6.3V 0402
2L21	4822 124 12095	100µF 20% 16V
2L22	2020 552 96834	1µF 20% 6.3V 0402
2L23	2020 552 96834	1µF 20% 6.3V 0402
2L24	2020 552 96834	1µF 20% 6.3V 0402
2L25	2020 552 96834	1µF 20% 6.3V 0402
2L26	2020 552 00005	4.7µF 10% 6.3V 0603
2L27	2020 552 00005	4.7µF 10% 6.3V 0603
2L30	4822 124 12095	100µF 20% 16V
2L31	3198 035 71040	100nF 10% 16V 0402
2L32	2020 552 96834	1µF 20% 6.3V 0402
2L33	3198 035 71040	100nF 10% 16V 0402
2L34	4822 124 12095	100µF 20% 16V
2L35	4822 126 14519	22pF 5% 50V 0402
2L36	4822 126 14519	22pF 5% 50V 0402
2L37	3198 035 71040	100nF 10% 16V 0402
2L51	3198 035 02210	220pF 5% 50V 0402
2L52	3198 035 04710	470pF 50V 0402
2L53	2020 552 96618	1nF 10% 50V 0402
2L61	3198 035 02210	220pF 5% 50V 0402
2L62	3198 035 04710	470pF 50V 0402
2L63	2020 552 96618	1nF 10% 50V 0402
2L71	2020 552 00005	4.7µF 10% 6.3V 0603
2L72	3198 035 71040	100nF 10% 16V 0402
2L73	2020 552 96637	10µF 10% 6.3V 0805
2L92	3198 035 74730	47nF 5% 16V 0402
2L93	3198 035 74730	47nF 5% 16V 0402
2L94	2020 552 96618	1nF 10% 50V 0402
2L95	4822 117 13605	Jumper 0402
2L96	3198 035 71040	100nF 10% 16V 0402
2L97	3198 035 74730	47nF 5% 16V 0402
2L98	3198 035 74730	47nF 5% 16V 0402
2M00	3198 035 71040	100nF 10% 16V 0402
2M01	3198 035 71040	100nF 10% 16V 0402
2M02	3198 035 71040	100nF 10% 16V 0402
2M03	3198 035 71040	100nF 10% 16V 0402
2M04	3198 035 71040	100nF 10% 16V 0402
2M05	3198 035 71040	100nF 10% 16V 0402
2M06	3198 035 71040	100nF 10% 16V 0402
2M07	3198 035 71040	100nF 10% 16V 0402
2M08	3198 035 71040	100nF 10% 16V 0402
2M09	3198 035 71040	100nF 10% 16V 0402
2M10	3198 035 71040	100nF 10% 16V 0402
2M11	3198 035 71040	100nF 10% 16V 0402
2M12	3198 035 71040	100nF 10% 16V 0402
2M13	3198 035 71040	100nF 10% 16V 0402
2M14	3198 035 71040	100nF 10% 16V 0402
2M15	3198 035 71040	100nF 10% 16V 0402
2M16	3198 035 71040	100nF 10% 16V 0402
2M17	3198 035 71040	100nF 10% 16V 0402
2M18	3198 035 71040	100nF 10% 16V 0402
2M19	3198 035 71040	100nF 10% 16V 0402
2M20	3198 035 71040	100nF 10% 16V 0402
2M21	2020 552 00183	2.2µF 10% 6.3V 0603
2M22	3198 035 71040	100nF 10% 16V 0402
2M23	5322 124 41945	22µF 20% 35V
2M24	3198 035 71040	100nF 10% 16V 0402
2M25	3198 035 71040	100nF 10% 16V 0402
2M26	3198 035 71040	100nF 10% 16V 0402
2M27	3198 035 71040	100nF 10% 16V 0402
2M28	3198 035 71040	100nF 10% 16V 0402
2M29	3198 035 71040	100nF 10% 16V 0402
2M30	3198 035 71040	100nF 10% 16V 0402
2M31	5322 124 41945	22µF 20% 35V
2M32	5322 124 41945	22µF 20% 35V
2M56	5322 124 41945	22µF 20% 35V
2M65	3198 035 71040	100nF 10% 16V 0402
2M66	4822 124 12095	100µF 20% 16V
2M67	3198 035 71040	100nF 10% 16V 0402
2M68	4822 124 12095	100µF 20% 16V
2N01	3198 035 71040	100nF 10% 16V 0402
2N02	3198 035 71040	100nF 10% 16V 0402
2N03	3198 035 71040	100nF 10% 16V 0402
2N04	3198 035 71040	100nF 10% 16V 0402
2N05	3198 035 71040	100nF 10% 16V 0402
2N06	3198 035 71040	100nF 10% 16V 0402
2N07	3198 035 71040	100nF 10% 16V 0402
2N08	3198 035 71040	100nF 10% 16V 0402
2N09	3198 035 71040	100nF 10% 16V 0402
2N10	3198 035 71040	100nF 10% 16V 0402
2N11	3198 035 71040	100nF 10% 16V 0402
2N12	3198 035 71040	100nF 10% 16V 0402
2N13	3198 035 71040	100nF 10% 16V 0402
2N14	3198 035 71040	100nF 10% 16V 0402
2N15	3198 035 71040	100nF 10% 16V 0402
2N16	3198 035 71040	100nF 10% 16V 0402
2N17	4822 124 11131	47µF 6.3V
2N19	3198 035 71040	100nF 10% 16V 0402
2N20	3198 035 71040	100nF 10% 16V 0402
2N21	3198 035 71040	100nF 10% 16V 0402
2N22	3198 035 71040	100nF 10% 16V 0402
2N23	3198 035 71040	100nF 10% 16V 0402
2N24	4822 124 11131	47µF 6.3V
2N25	4822 124 11131	47µF 6.3V
2N26	3198 035 71040	100nF 10% 16V 0402
2N27	3198 035 71040	100nF 10% 16V 0402
2N28	2020 552 00005	4.7µF 10% 6.3V 0603
2N29	3198 035 71040	100nF 10% 16V 0402
2N30	3198 035 71040	100nF 10% 16V 0402
2N31	3198 035 71040	100nF 10% 16V 0402
2N32	3198 035 71040	100nF 10% 16V 0402
2N33	3198 035 71040	100nF 10% 16V 0402

2N35	3198 035 71040	100nF 10% 16V 0402
2N36	3198 035 71040	100nF 10% 16V 0402
2N37	3198 035 71040	100nF 10% 16V 0402
2N38	3198 035 71040	100nF 10% 16V 0402
2N39	3198 035 71040	100nF 10% 16V 0402
2N40	3198 035 71040	100nF 10% 16V 0402
2N41	3198 035 71040	100nF 10% 16V 0402
2N42	3198 035 71040	100nF 10% 16V 0402
2N43	3198 035 71040	100nF 10% 16V 0402
2N44	3198 035 71040	100nF 10% 16V 0402
2N45	3198 035 71040	100nF 10% 16V 0402
2N46	3198 035 71040	100nF 10% 16V 0402
2N47	3198 035 71040	100nF 10% 16V 0402
2N48	3198 035 71040	100nF 10% 16V 0402
2N49	3198 035 71040	100nF 10% 16V 0402
2N50	3198 035 71040	100nF 10% 16V 0402
2N51	4822 124 11131	47µF 6.3V
2N55	3198 035 71040	100nF 10% 16V 0402
2N56	3198 035 71040	100nF 10% 16V 0402
2N57	3198 035 71040	100nF 10% 16V 0402
2N58	3198 035 71040	100nF 10% 16V 0402
2N59	3198 035 71040	100nF 10% 16V 0402
2N60	3198 035 71040	100nF 10% 16V 0402
2N61	3198 035 71040	100nF 10% 16V 0402
2N62	3198 035 71040	100nF 10% 16V 0402
2N63	3198 035 71040	100nF 10% 16V 0402
2N64	3198 035 71040	100nF 10% 16V 0402
2N65	3198 035 71040	100nF 10% 16V 0402
2N66	3198 035 71040	100nF 10% 16V 0402
2N67	3198 035 71040	100nF 10% 16V 0402
2N68	4822 124 12095	100µF 20% 16V
2N69	2238 869 15101	100pF 5% 50V 0402
2N75	3198 035 71040	100nF 10% 16V 0402
2N76	2020 552 00005	4.7µF 10% 6.3V 0603
2N80	2238 869 15109	10pF 5% 50V 0402
2N81	2238 869 15109	10pF 5% 50V 0402
2N82	2238 869 15109	10pF 5% 50V 0402
2N83	2238 869 15109	10pF 5% 50V 0402
2N84	2238 869 15109	10pF 5% 50V 0402
2N85	2238 869 15109	10pF 5% 50V 0402
2N86	2238 869 15109	10pF 5% 50V 0402
2N87	2238 869 15109	10pF 5% 50V 0402
2N88	2238 869 15109	10pF 5% 50V 0402
2N89	2238 869 15109	10pF 5% 50V 0402
2N90	3198 035 71030	10nF 16V 0402

–WW–

3151	4822 117 13545	100Ω 1% 0402
3152	4822 117 13545	100Ω 1% 0402
3153	4822 117 13606	10kΩ 5% 0.01W 0402
3154	4822 051 30103	10kΩ 5% 0.062W
3155	4822 117 13548	1kΩ 5% 0402
3157	4822 051 30682	6.8Ω 5% 0.062W
3158	4822 051 30222	2.2kΩ 5% 0.062W
3159	4822 051 30222	2.2kΩ 5% 0.062W
3161	4822 051 30223	22kΩ 5% 0.062W
3162	4822 051 30183	18kΩ 5% 0.062W
3163	4822 051 30101	100Ω 5% 0.062W
3164	4822 051 30101	100Ω 5% 0.062W
3170	4822 117 13606	10kΩ 5% 0.01W 0402
3171	4822 117 13606	10kΩ 5% 0.01W 0402
3172	4822 117 13545	100Ω 1% 0402
3173	4822 117 13545	100Ω 1% 0402
3207	3198 031 06810	680Ω 5% 0.01W 0402
3208	4822 117 13545	100Ω 1% 0402
3209	4822 117 13545	100Ω 1% 0402
3210	4822 117 13545	100Ω 1% 0402
3211	4822 117 13545	100Ω 1% 0402
3212	4822 117 13545	100Ω 1% 0402
3213	4822 117 13545	100Ω 1% 0402
3214	3198 031 06810	680Ω 5% 0.01W 0402
3215	3198 031 02710	270Ω 5% 0.1W 0402
3216	4822 117 13597	330Ω 5% 0.01W 0402
3217	4822 117 13548	1kΩ 5% 0402
3218	4822 117 11297	100kΩ 5% 0.1W
3219	4822 117 13545	100Ω 1% 0402
3220	3198 031 04730	47Ω 5% 0402
3222	4822 117 13545	100Ω 1% 0402
3223	3198 031 01090	10Ω 5% 0.01W 0402
3224	3198 031 04720	4.7kΩ 5% 0402
3225	3198 031 04720	4.7kΩ 5% 0402
3226	4822 117 13545	100Ω 1% 0402
3227	4822 117 13545	100Ω 1% 0402
3229	3198 031 04720	4.7kΩ 5% 0402
3230	4822 117 13606	10kΩ 5% 0.01W 0402
3231	4822 117 13602	2.2kΩ 5% 0.01W 0402
3232	3198 031 03320	3.3kΩ 5% 0402
3233	3198 031 03320	3.3kΩ 5% 0402
3234	3198 031 04720	4.7kΩ 5% 0402
3235	3198 031 04720	4.7kΩ 5% 0402
3236	3198 031 04720	4.7kΩ 5% 0402
3238	4822 117 13545	100Ω 1% 0402
3239	4822 117 13545	100Ω 1% 0402
3240	2322 704 61002	1kΩ 1%
3241	4822 117 13545	100Ω 1% 0402
3242	4822 117 13606	10kΩ 5% 0.01W 0402
3243	3198 031 04720	4.7kΩ 5% 0402
3245	3198 031 02240	220kΩ 5% 0.1W 0402
3246	3198 031 04720	4.7kΩ 5% 0402
3247	4822 117 13545	100Ω 1% 0402
3248	4822 117 13545	100Ω 1% 0402
3249	3198 031 04720	4.7kΩ 5% 0402
3262	4822 117 13601	22kΩ 5% 0402
3263	2322 702 70398	3.9Ω 5% 0603
3264	4822 117 13601	22kΩ 5% 0402
3265	2322 702 70398	3.9Ω 5% 0603
3266	3198 031 05620	5.6kΩ 5% 0.01W 0402
3267	3198 031 05620	5.6kΩ 5% 0.01W 0402
3268	4822 117 13545	100Ω 1% 0402
3272	3198 031 04720	4.7kΩ 5% 0402
3273	4822 117 13548	1kΩ 5% 0402
3274	3198 031 03910	390Ω 1% 0402
3275	4822 117 13545	100Ω 1% 0402
3276	3198 031 07590	75Ω 5% 0402
3277	3198 031 01520	1.2kΩ 5% 0.01W 0402
3280	4822 117 11151	1Ω 5%
3281	3198 031 03930	39kΩ 5% 0402
3282	4822 051 30151	150Ω 5% 0.062W
3285	4822 117 13605	Jumper 0402
3286	4822 117 13545	100Ω 1% 0402
3292	3198 031 02730	27kΩ 5% 0402
3294	3198 031 04730	47Ω 5% 0402
3295	4822 117 11297	100kΩ 5% 0.1W
3297	3198 031 03320	3.3kΩ 5% 0402
3298	3198 031 03320	3.3kΩ 5% 0402
3299	3198 031 04720	4.7kΩ 5% 0402
3431	4822 117 13548	1kΩ 5% 0402
3451	3198 031 04720	4.7kΩ 5% 0402
3453	4822 117 13545	100Ω 1% 0402
3454	4822 117 13545	100Ω 1% 0402
3455	4822 117 13545	100Ω 1% 0402
3456	4822 117 13545	100Ω 1% 0402
3458	4822 117 13545	100Ω 1% 0402
3459	4822 117 13545	100Ω 1% 0402
3461	4822 117 13545	100Ω 1% 0402
3462	4822 117 13545	100Ω 1% 0402
3501	4822 117 13543	470Ω 5% 0402
3502	3198 031 04730	47Ω 5% 0402
3604	4822 117 13601	22kΩ 5% 0402
3605	4822 117 13601	22kΩ 5% 0402
3609	4822 117 13601	22kΩ 5% 0402
3610	4822 117 11297	100kΩ 5% 0.1W
3611	4822 117 11297	100kΩ 5% 0.1W
3612	4822 117 13601	22kΩ 5% 0402
3616	4822 117 13605	Jumper 0402
3617	4822 117 13548	1kΩ 5% 0402
3619	4822 117 13606	10kΩ 5% 0.01W 0402
3628	4822 117 13606	10kΩ 5% 0.01W 0402
3629	4822 117 13601	22kΩ 5% 0402
3630	4822 117 13602	2.2kΩ 5% 0.01W 0402
3631	4822 117 13602	2.2kΩ 5% 0.01W 0402
3632	2322 705 70569	56Ω 5% 0402
3633	2322 705 70569	56Ω 5% 0402
3701	4822 117 13606	10kΩ 5% 0.01W 0402
3702	4822 117 13606	10kΩ 5% 0.01W 0402
3709	3198 031 06820	6.8kΩ 5% 0.01W 0402
3718	5322 117 11726	10Ω 5%
3719	3198 031 01220	1.2kΩ 5% 0.01W 0402
3720	4822 117 13613	2.2Ω 5% 0603
3721	4822 117 13613	2.2Ω 5% 0603
3722	3198 031 02720	2.7kΩ 5% 0.01W 0402
3723	4822 051 20109	10Ω 5% 0.1W
3724	3198 031 01530	15kΩ 5% 0.01W 0402
3725	2322 704 63302	3.3kΩ 1% 0603
3726	3198 031 01220	1.2kΩ 5% 0.01W 0402
3727	2322 704 61002	1kΩ 1%
3732	2322 704 61002	1kΩ 1%
3733	2322 704 63302	3.3kΩ 1% 0603
3734	4822 117 13545	100Ω 1% 0402
3735	4822 117 13548	1kΩ 5% 0402
3736	3198 031 04720	4.7kΩ 5% 0402
3740	3198 031 01520	1.2kΩ 5% 0.01W 0402
3741	3198 031 01520	1.2kΩ 5% 0.01W 0402
3742	3198 031 01530	15kΩ 5% 0.01W 0402
3743	4822 117 13601	22kΩ 5% 0402
3800	4822 117 13606	10kΩ 5% 0.01W 0402
3801	2350 035 10229	4 x 22Ω 5% 1206
3802	2350 035 10229	4 x 22Ω 5% 1206
3803	2350 035 10229	4 x 22Ω 5% 1206
3804	2350 035 10229	4 x 22Ω 5% 1206
3805	2350 035 10229	4 x 22Ω 5% 1206
3806	2350 035 10229	4 x 22Ω 5% 1206
3807	2350 035 10229	4 x 22Ω 5% 1206
3808	2350 035 10229	4 x 22Ω 5% 1206
3809	2350 035 10229	4 x 22Ω 5% 1206
3810	2350 035 10229	4 x 22Ω 5% 1206
3811	2350 035 10229	4 x 22Ω 5% 1206
3812	2350 035 10229	4 x 22Ω 5% 1206
3813	2350 035 10229	4 x 22Ω 5% 1206
3814	3198 031 02290	22Ω 5% 0.1W 0402
3815	3198 031 02290	22Ω 5% 0.1W 0402
3816	3198 031 02290	22Ω 5% 0.1W 0402
3817	4822 117 13606	10kΩ 5% 0.01W 0402
3818	4822 117 13606	10kΩ 5% 0.01W 0402
3820	4822 117 13606	10kΩ 5% 0.01W 0402
3822	4822 117 13545	100Ω 1% 0402
3824	3198 031 03320	3.3kΩ 5% 0402
3825	3198 031 11030	4 x 10kΩ 5% 1206
3826	3198 031 11030	4 x 10kΩ 5% 1206
3827	4822 117 13606	10kΩ 5% 0.01W 0402
3828	4822 117 13606	10kΩ 5% 0.01W 0402
3829	4822 117 13606	10kΩ 5% 0.01W 0402
3831	4822 117 13545	100Ω 1% 0402
3832	4822 117 13545	100Ω 1% 0402
3834	4822 117 13606	10kΩ 5% 0.01W 0402
3835	4822 117 13606	10kΩ 5% 0.01W 0402
3836	4822 117 13606	10kΩ 5% 0.01W 0402
3837	4822 117 13606	10kΩ 5% 0.01W 0402
3838	4822 117 13606	10kΩ 5% 0.01W 0402
3839	4822 117 13545	100Ω 1% 0402
3840	3198 031 02290	22Ω 5% 0.1W 0402
3841	4822 117 13606	10kΩ 5% 0.01W 0402
3842	4822 117 13606	10kΩ 5% 0.01W 0402
3900	3198 031 03320	3.3kΩ 5% 0402
3901	4822 117 13606	10kΩ 5% 0.01W 0402
3902	4822 117 13606	10kΩ 5% 0.01W 0402
3903	4822 117 13545	100Ω 1% 0402
3904	4822 117 13545	100Ω 1% 0402
3A10	4822 117 13606	10kΩ 5% 0.01W 0402
3A11	4822 117 13606	10kΩ 5% 0.01W 0402
3A13	4822 117 13606	10kΩ 5% 0.01W 0402
3A14	3198 031 04720	4.7kΩ 5% 0402
3B01	4822 117 12706	10kΩ 1% 0.063W 0603
3B02	4822 117 12706	10kΩ 1% 0.063W 0603
3B03	2322 704 61501	150Ω 1% 0603
3C00	4822 117 13606	10kΩ 5% 0.01W 0402
3C01	4822 117 13606	10kΩ 5% 0.01W 0402
3C02	4822 117 13548	1kΩ 5% 0402
3C04	3198 031 11030	4 x 10kΩ 5% 1206
3C05	4822 117 13606	10kΩ 5% 0.01W 0402
3C06	3198 031 11030	4 x 10kΩ 5% 1206
3C07	3198 031 11030	4 x 10kΩ 5% 1206
3C08	3198 031 11030	4 x 10kΩ 5% 1206
3C09	3198 031 11030	4 x 10kΩ 5% 1206
3C10	3198 031 11030	4 x 10kΩ 5% 1206
3C16	3198 031 11030	4 x 10kΩ 5% 1206
3C17	4822 117 13606	10kΩ 5% 0.01W 0402
3C18	4822 117 13606	10kΩ 5% 0.01W 0402
3C22	4822 117 13548	1kΩ 5% 0402
3C23	3198 031 02240	220kΩ 5% 0.1W 0402
3D00	3198 031 04720	4.7kΩ 5% 0402
3D01	3198 031 04730	47Ω 5% 0402
3D02	3198 031 04720	4.7kΩ 5% 0402
3D03	3198 031 04730	47Ω 5% 0402
3D05	4822 117 13545	100Ω 1% 0402
3D06	4822 117 13545	100Ω 1% 0402
3D07	2322 704 61002	1kΩ 1%
3D08	2322 704 61002	1kΩ 1%
3D09	3198 031 04730	47Ω 5% 0402
3D10	3198 031 04730	47Ω 5% 0402
3D11	3198 031 05620	5.6kΩ 5% 0.01W 0402
3D15	3198 031 13390	4 x 33Ω 5% 1206
3D16	3198 031 13390	4 x 33Ω 5% 1206
3D17	3198 031 13390	4 x 33Ω 5% 1206
3D18	3198 021 31080	1Ω 5% 0603
3D19	3198 021 31080	1Ω 5% 0603
3D20	3198 031 13390	4 x 33Ω 5% 1206
3D21	3198 031 13390	4 x 33Ω 5% 1206
3D22	3198 031 03390	33Ω 1% 0402
3D23	3198 031 03390	33Ω 1% 0402
3D24	4822 117 13596	220Ω 5% 0.01W 0402
3D26	4822 117 13596	220Ω 5% 0.01W 0402
3D27	3198 031 03320	3.3kΩ 5% 0402
3E06	3198 031 04730	47Ω 5% 0402
3E07	3198 031 04730	47Ω 5% 0402
3E08	3198 031 04730	47Ω 5% 0402
3E09	3198 031 04730	47Ω 5% 0402
3E10	3198 031 04730	47Ω 5% 0402
3E11	3198 031 04730	47Ω 5% 0402
3E12	4822 117 13606	10kΩ 5% 0.01W 0402
3E13	4822 117 13605	Jumper 0402
3E14	4822 117 13605	Jumper 0402
3E15	4822 117 13605	Jumper 0402
3E19	2322 705 70569	56Ω 5% 0402
3E20	2322 705 70569	56Ω 5% 0402
3E21	2322 705 70569	56Ω 5% 0402
3E22	4822 117 13632	100kΩ 1% 0603 0.62W
3E23	3198 031 08210	820Ω 5% 0.5W
3E24	4822 117 13543	470Ω 5% 0402
3E24	4822 117 13597	330Ω 5% 0.01W 0402

3E25	2322 705 70399	39Ω 5% 0402
3E26	3198 031 02290	22Ω 5% 0.1W 0402
3E27	2322 705 70399	39Ω 5% 0402
3E28	3198 031 02290	22Ω 5% 0.1W 0402
3E29	2322 705 70399	39Ω 5% 0402
3E30	3198 031 02290	22Ω 5% 0.1W 0402
3E31	4822 117 13545	100Ω 1% 0402
3E33	4822 117 13545	100Ω 1% 0402
3E35	4822 117 13545	100Ω 1% 0402
3E36	4822 117 13545	100Ω 1% 0402
3E37	3198 031 02290	22Ω 5% 0.1W 0402
3E38	4822 117 13545	100Ω 1% 0402
3E39	4822 117 13545	100Ω 1% 0402
3E43	4822 117 13545	100Ω 1% 0402
3E46	3198 031 01090	10Ω 5% 0.01W 0402
3E49	3198 031 02290	22Ω 5% 0.1W 0402
3E50	3198 031 04730	47Ω 5% 0402
3E51	3198 031 04730	47Ω 5% 0402
3E52	3198 031 04730	47Ω 5% 0402
3E53	3198 031 04730	47Ω 5% 0402
3E54	3198 031 04730	47Ω 5% 0402
3E55	3198 031 04730	47Ω 5% 0402
3E57	3198 031 01090	10Ω 5% 0.01W 0402
3F01	4822 051 30102	1kΩ 5% 0.062W
3F02	4822 051 30222	2.2kΩ 5% 0.062W
3F03	4822 051 30102	1kΩ 5% 0.062W
3F04	4822 051 30222	2.2kΩ 5% 0.062W
3F05	4822 117 13603	33kΩ 5% 0402
3F06	4822 117 13603	33kΩ 5% 0402
3F07	4822 117 13603	33kΩ 5% 0402
3F08	4822 117 13603	33kΩ 5% 0402
3F09	4822 117 13603	33kΩ 5% 0402
3F10	4822 117 13603	33kΩ 5% 0402
3F11	4822 117 13603	33kΩ 5% 0402
3F12	4822 117 13603	33kΩ 5% 0402
3F13	4822 117 13603	33kΩ 5% 0402
3F14	4822 117 13603	33kΩ 5% 0402
3F15	4822 117 13603	33kΩ 5% 0402
3F16	4822 117 13603	33kΩ 5% 0402
3F17	4822 117 13603	33kΩ 5% 0402
3F18	4822 117 13603	33kΩ 5% 0402
3F19	4822 117 13603	33kΩ 5% 0402
3F20	4822 117 13603	33kΩ 5% 0402
3F24	4822 051 30103	10kΩ 5% 0.062W
3F25	4822 051 30103	10kΩ 5% 0.062W
3F26	4822 051 30153	15kΩ 5% 0.062W
3F27	4822 051 30153	15kΩ 5% 0.062W
3F28	4822 117 13545	100Ω 1% 0402
3F29	4822 117 13602	2.2kΩ 5% 0.01W 0402
3F30	4822 117 13545	100Ω 1% 0402
3F31	4822 117 13602	2.2kΩ 5% 0.01W 0402
3G01	4822 051 30151	150Ω 5% 0.062W
3G02	4822 117 12891	220kΩ 1%
3G03	4822 117 12891	220kΩ 1%
3G04	4822 051 30103	10kΩ 5% 0.062W
3G05	4822 051 30103	10kΩ 5% 0.062W
3G06	4822 051 30101	100Ω 5% 0.062W
3G07	4822 051 30101	100Ω 5% 0.062W
3G08	4822 051 30101	100Ω 5% 0.062W
3G09	2122 118 06408	91Ω 5% 0603
3G10	2122 118 06408	91Ω 5% 0603
3G11	3198 031 06820	6.8kΩ 5% 0.01W 0402
3G12	4822 051 30759	75Ω 5% 0.062W
3G13	4822 051 30331	330Ω 5% 0.062W
3G14	4822 051 30102	1kΩ 5% 0.062W
3G15	4822 051 30102	1kΩ 5% 0.062W
3G16	4822 051 30759	75Ω 5% 0.062W
3G17	4822 051 30101	100Ω 5% 0.062W
3G18	4822 051 30103	10kΩ 5% 0.062W
3G19	4822 051 30103	10kΩ 5% 0.062W
3G20	4822 051 30153	15kΩ 5% 0.062W
3G21	4822 051 30153	15kΩ 5% 0.062W
3G22	4822 051 30151	150Ω 5% 0.062W
3G23	4822 051 30151	150Ω 5% 0.062W
3G24	4822 117 12891	220kΩ 1%
3G25	4822 117 12891	220kΩ 1%
3G26	4822 051 30103	10kΩ 5% 0.062W
3G27	4822 051 30103	10kΩ 5% 0.062W
3G28	4822 051 30759	75Ω 5% 0.062W
3G29	4822 051 30102	1kΩ 5% 0.062W
3G30	4822 051 30689	68Ω 5% 0.063W 0603
3G33	4822 051 30102	1kΩ 5% 0.062W
3G34	4822 051 30101	100Ω 5% 0.062W
3G36	3198 031 04730	47Ω 5% 0402
3G37	3198 031 04730	47Ω 5% 0402
3G38	4822 051 30151	150Ω 5% 0.062W
3G39	4822 051 30273	27kΩ 5% 0.062W
3G57	3198 031 02730	27kΩ 5% 0402
3G58	4822 051 30689	68Ω 5% 0.063W 0603
3G59	2122 118 06408	91Ω 5% 0603
3G72	4822 051 30759	75Ω 5% 0.062W
3G73	4822 051 30759	75Ω 5% 0.062W
3G74	4822 051 30759	75Ω 5% 0.062W
3G75	4822 051 30759	75Ω 5% 0.062W
3G76	4822 117 13545	100Ω 1% 0402
3G77	3198 031 04730	47Ω 5% 0402
3G78	3198 031 04730	47Ω 5% 0402
3G79	3198 031 06820	6.8kΩ 5% 0.01W 0402
3G96	3198 031 04730	47Ω 5% 0402
3G99	3198 031 04730	47Ω 5% 0402
3J05	3198 031 06890	68Ω 5% 0402
3K00	4822 117 13545	100Ω 1% 0402
3K01	4822 117 13545	100Ω 1% 0402
3K02	4822 117 13606	10kΩ 5% 0.01W 0402
3K05	4822 117 13606	10kΩ 5% 0.01W 0402
3K07	2322 705 70399	39Ω 5% 0402
3K09	2322 705 70399	39Ω 5% 0402
3K11	3198 031 06890	68Ω 5% 0402
3K12	3198 031 06890	68Ω 5% 0402
3L01	2350 033 11229	4x 22Ω 5% Netw.
3L02	2350 033 11229	4x 22Ω 5% Netw.
3L05	2350 033 11229	4x 22Ω 5% Netw.
3L06	2350 033 11229	4x 22Ω 5% Netw.
3L07	3198 031 02290	22Ω 5% 0.1W 0402
3L09	3198 021 32290	22Ω 5% 0603
3L10	3198 021 32290	22Ω 5% 0603
3L12	4822 117 13606	10kΩ 5% 0.01W 0402
3L13	3198 031 03910	390Ω 1% 0402
3L18	3198 031 01510	150Ω 5% 0.01W 0402
3L19	3198 031 01510	150Ω 5% 0.01W 0402
3L38	4822 051 30222	2.2kΩ 5% 0.062W
3L39	4822 051 30222	2.2kΩ 5% 0.062W
3L49	4822 117 13548	1kΩ 5% 0402
3L53	4822 117 13597	330Ω 5% 0.01W 0402
3L54	4822 117 13543	470Ω 5% 0402
3L55	4822 117 13545	100Ω 1% 0402
3L56	4822 117 13548	1kΩ 5% 0402
3L57	4822 117 13545	100Ω 1% 0402
3L58	4822 117 13548	1kΩ 5% 0402
3L60	4822 117 13605	Jumper 0402
3L61	4822 117 13597	330Ω 5% 0.01W 0402
3L62	4822 117 13543	470Ω 5% 0402
3L63	4822 117 13545	100Ω 1% 0402
3L64	4822 117 13548	1kΩ 5% 0402
3L65	4822 117 13545	100Ω 1% 0402
3L67	4822 117 13605	Jumper 0402
3L68	4822 117 13605	Jumper 0402
3L71	4822 117 13597	330Ω 5% 0.01W 0402
3L73	4822 117 13545	100Ω 1% 0402
3L75	4822 051 30153	15kΩ 5% 0.062W
3L76	4822 051 30153	15kΩ 5% 0.062W
3L92	3198 031 03390	33Ω 1% 0402
3L93	3198 031 06890	68Ω 5% 0402
3L94	3198 031 03910	390Ω 1% 0402
3L95	4822 117 13605	Jumper 0402
3L96	4822 117 13605	Jumper 0402
3L97	3198 031 03390	33Ω 1% 0402
3L98	3198 031 06890	68Ω 5% 0402
3L99	3198 031 03910	390Ω 1% 0402
3M01	2350 035 10689	4 x 68Ω 5%
3M02	2350 035 10689	4 x 68Ω 5%
3M03	2350 035 10689	4 x 68Ω 5%
3M04	2350 035 10689	4 x 68Ω 5%
3M06	2350 035 10229	4 x 22Ω 5% 1206
3M07	2350 035 10229	4 x 22Ω 5% 1206
3M08	2350 035 10229	4 x 22Ω 5% 1206
3M09	2350 035 10229	4 x 22Ω 5% 1206
3M11	3198 031 04720	4.7kΩ 5% 0402
3M13	3198 031 04720	4.7kΩ 5% 0402
3M14	4822 117 13545	100Ω 1% 0402
3M15	4822 117 13545	100Ω 1% 0402
3M16	3198 031 04720	4.7kΩ 5% 0402
3M50	4822 117 13606	10kΩ 5% 0.01W 0402
3M51	4822 117 13606	10kΩ 5% 0.01W 0402
3M52	4822 117 13606	10kΩ 5% 0.01W 0402
3M53	4822 117 13546	47Ω 5% 0402
3M54	4822 117 13546	47Ω 5% 0402
3M55	4822 117 13546	47Ω 5% 0402
3M56	4822 117 13606	10kΩ 5% 0.01W 0402
3M57	4822 117 13546	47Ω 5% 0402
3M58	4822 117 13606	10kΩ 5% 0.01W 0402
3M59	4822 117 13546	47Ω 5% 0402
3M78	4822 117 13548	1kΩ 5% 0402
3M79	3198 031 03320	3.3kΩ 5% 0402
3M87	4822 117 13605	Jumper 0402
3M89	3198 031 02290	22Ω 5% 0.1W 0402
3M90	3198 031 02290	22Ω 5% 0.1W 0402
3N01	4822 117 13545	100Ω 1% 0402
3N02	4822 117 13545	100Ω 1% 0402
3N03	4822 117 13545	100Ω 1% 0402
3N04	4822 117 13545	100Ω 1% 0402
3N05	4822 117 13545	100Ω 1% 0402
3N10	3198 031 01050	1MΩ 5% 0402
3N11	4822 117 13546	47Ω 5% 0402
3N12	3198 031 04720	4.7kΩ 5% 0402
3N14	3198 031 04720	4.7kΩ 5% 0402
3N15	3198 031 04720	4.7kΩ 5% 0402
3N16	3198 031 04720	4.7kΩ 5% 0402
3N17	3198 031 04720	4.7kΩ 5% 0402
3N20	4822 117 13545	100Ω 1% 0402
3N21	4822 117 13545	100Ω 1% 0402
3N22	3198 031 04720	4.7kΩ 5% 0402
3N23	3198 031 04720	4.7kΩ 5% 0402
3N26	3198 031 04720	4.7kΩ 5% 0402
3N27	3198 031 04720	4.7kΩ 5% 0402
3N28	3198 031 04720	4.7kΩ 5% 0402
3N29	4822 117 13545	100Ω 1% 0402
3N30	4822 117 13606	10kΩ 5% 0.01W 0402
3N31	3198 031 04720	4.7kΩ 5% 0402
3N71	3198 031 04720	4.7kΩ 5% 0402
3N72	3198 031 04720	4.7kΩ 5% 0402
3N73	3198 031 04720	4.7kΩ 5% 0402
3N80	4822 117 13545	100Ω 1% 0402
3N81	4822 117 13545	100Ω 1% 0402
3S00	3198 031 04730	47Ω 5% 0402
3S03	3198 031 04730	47Ω 5% 0402
4211	4822 117 13605	Jumper 0402
4212	4822 117 13605	Jumper 0402
4218	4822 117 13605	Jumper 0402
4219	4822 117 13605	Jumper 0402
4440	4822 117 13605	Jumper 0402
4441	4822 117 13605	Jumper 0402
4501	4822 117 13605	Jumper 0402
4502	4822 117 13605	Jumper 0402
4504	4822 117 13605	Jumper 0402
4511	4822 117 13605	Jumper 0402
4801	4822 117 13605	Jumper 0402
4D03	4822 117 13605	Jumper 0402
4D04	4822 117 13605	Jumper 0402
4E01	4822 117 13605	Jumper 0402
4E10	3198 031 01090	10Ω 5% 0.01W 0402
4E11	3198 031 01090	10Ω 5% 0.01W 0402
4G04	4822 117 13605	Jumper 0402
4G05	4822 117 13605	Jumper 0402
4G07	4822 117 13605	Jumper 0402
4G08	4822 117 13605	Jumper 0402
4G31	4822 117 13605	Jumper 0402
4J01	4822 117 13605	Jumper 0402
4K04	4822 117 13605	Jumper 0402
4K05	4822 117 13605	Jumper 0402
4L37	4822 117 13545	100Ω 1% 0402
4M00	4822 117 13605	Jumper 0402
4M01	4822 117 13605	Jumper 0402
4M02	4822 117 13605	Jumper 0402
4M03	4822 117 13605	Jumper 0402
4M05	4822 117 13605	Jumper 0402
4M08	4822 117 13605	Jumper 0402
4M09	4822 117 13605	Jumper 0402
4M10	4822 117 13605	Jumper 0402
4M16	4822 117 13605	Jumper 0402
4M17	4822 117 13605	Jumper 0402
4N01	4822 117 13605	Jumper 0402
4N02	4822 117 13605	Jumper 0402
4N03	4822 117 13605	Jumper 0402
4N04	4822 117 13605	Jumper 0402
4N05	4822 117 13605	Jumper 0402
4N06	4822 117 13605	Jumper 0402
4N07	4822 117 13605	Jumper 0402
4N08	4822 117 13605	Jumper 0402
4N09	4822 117 13605	Jumper 0402
4N10	4822 117 13605	Jumper 0402
4N11	4822 117 13605	Jumper 0402
4N12	4822 117 13605	Jumper 0402
4N13	4822 117 13605	Jumper 0402
4N26	4822 117 13605	Jumper 0402
4N30	4822 117 13605	Jumper 0402
4N31	4822 117 13605	Jumper 0402
4N34	4822 117 13605	Jumper 0402
4N35	4822 117 13605	Jumper 0402

⎓

5151	3198 018 33970	0.39µH 10% 0805
5152	4822 157 71334	0.68µH 5% 1008
5153	4822 157 71334	0.68µH 5% 1008
5201	4822 157 11716	Bead 30Ω at 100MHz
5202	4822 157 11716	Bead 30Ω at 100MHz
5203	4822 157 11716	Bead 30Ω at 100MHz
5204	2422 549 42896	Bead 120Ω 100MHz
5205	4822 157 11716	Bead 30Ω at 100MHz
5206	4822 157 11716	Bead 30Ω at 100MHz
5207	2422 549 42896	Bead 120Ω 100MHz
5208	4822 157 11716	Bead 30Ω at 100MHz
5209	4822 157 11716	Bead 30Ω at 100MHz
5210	4822 157 11716	Bead 30Ω at 100MHz
5211	4822 157 11716	Bead 30Ω at 100MHz
5212	4822 157 11716	Bead 30Ω at 100MHz
5213	4822 157 11716	Bead 30Ω at 100MHz
5214	2422 536 00667	1000µH 20% 7032
5216	4822 157 11716	Bead 30Ω at 100MHz
5218	2422 549 45333	Bead 120Ω at 100MHz

5501	3198 018 31080	1µH 10% 0805
5704	2422 549 45333	Bead 120Ω at 100MHz
5709	2422 535 94134	10µH 20% 0805
5713	2422 536 01218	3.3µH 30%
5717	2422 536 00671	10µH 20%
5730	2422 535 94134	10µH 20% 0805
5733	2422 536 00707	33µH 20%
5735	2422 536 00516	100µH 20%
5737	2422 535 94134	10µH 20% 0805
5738	2422 549 45333	Bead 120Ω at 100MHz
5751	2422 535 94134	10µH 20% 0805
5900	2422 549 45333	Bead 120Ω at 100MHz
5901	2422 549 45333	Bead 120Ω at 100MHz
5902	2422 549 45333	Bead 120Ω at 100MHz
5903	2422 549 45333	Bead 120Ω at 100MHz
5904	2422 549 45333	Bead 120Ω at 100MHz
5905	2422 549 45333	Bead 120Ω at 100MHz
5906	2422 549 45333	Bead 120Ω at 100MHz
5907	2422 549 45333	Bead 120Ω at 100MHz
5908	2422 549 45333	Bead 120Ω at 100MHz
5909	2422 549 45333	Bead 120Ω at 100MHz
5910	2422 549 45333	Bead 120Ω at 100MHz
5911	2422 549 45333	Bead 120Ω at 100MHz
5C00	2422 549 45333	Bead 120Ω at 100MHz
5D00	2422 549 42896	Bead 120Ω 100MHz
5D01	2422 549 42896	Bead 120Ω 100MHz
5D02	2422 549 42896	Bead 120Ω 100MHz
5D03	2422 549 42896	Bead 120Ω 100MHz
5D04	2422 549 42896	Bead 120Ω 100MHz
5D05	2422 549 42896	Bead 120Ω 100MHz
5D06	2422 549 42896	Bead 120Ω 100MHz
5E00	2422 549 45333	Bead 120Ω at 100MHz
5E01	2422 549 45333	Bead 120Ω at 100MHz
5G01	2422 549 45333	Bead 120Ω at 100MHz
5G02	2422 549 45333	Bead 120Ω at 100MHz
5G03	2422 549 45333	Bead 120Ω at 100MHz
5G06	2422 549 45333	Bead 120Ω at 100MHz
5G07	2422 549 42896	Bead 120Ω 100MHz
5G08	2422 549 42896	Bead 120Ω 100MHz
5J01	2422 549 42896	Bead 120Ω 100MHz
5J02	2422 549 42896	Bead 120Ω 100MHz
5J03	2422 549 45333	Bead 120Ω at 100MHz
5J04	2422 549 45333	Bead 120Ω at 100MHz
5L01	2422 549 45333	Bead 120Ω at 100MHz
5L11	2422 549 45333	Bead 120Ω at 100MHz
5L17	2422 549 45333	Bead 120Ω at 100MHz
5L19	2422 549 45333	Bead 120Ω at 100MHz
5L21	2422 549 45333	Bead 120Ω at 100MHz
5L51	4822 157 71694	0.82µH 10%
5L52	3198 018 53380	3.3µH 10% 0603
5L53	3198 018 56880	6.8µH 10% 0603
5L61	4822 157 71694	0.82µH 10%
5L62	3198 018 53380	3.3µH 10% 0603
5L63	3198 018 56880	6.8µH 10% 0603
5L71	2422 549 45333	Bead 120Ω at 100MHz
5M00	2422 549 45333	Bead 120Ω at 100MHz
5M01	2422 549 45333	Bead 120Ω at 100MHz
5M02	2422 549 45333	Bead 120Ω at 100MHz
5M03	2422 549 45333	Bead 120Ω at 100MHz
5M04	2422 549 45333	Bead 120Ω at 100MHz
5M05	2422 549 45333	Bead 120Ω at 100MHz
5N03	4822 157 11716	Bead 30Ω at 100MHz
5N04	4822 157 11716	Bead 30Ω at 100MHz
5N05	4822 157 11716	Bead 30Ω at 100MHz
5N06	4822 157 11716	Bead 30Ω at 100MHz
5N07	4822 157 11716	Bead 30Ω at 100MHz
5N10	4822 157 11716	Bead 30Ω at 100MHz
5N11	4822 157 11716	Bead 30Ω at 100MHz
5N12	4822 157 11716	Bead 30Ω at 100MHz
5N72	4822 157 11716	Bead 30Ω at 100MHz

6151	4822 130 11416	PDZ6.8B
6152	4822 130 11416	PDZ6.8B
6153	4822 130 11397	BAS316
6154	4822 130 11525	1SS356
6204	4822 130 80622	BAT54
6205	4822 130 80622	BAT54
6430	9340 548 42115	PDZ2.4B
6431	9965 000 20150	1N4148WS SOD-323
6601	4822 130 10838	UDZ3.3B
6717	4822 130 11397	BAS316
6718	3198 010 10720	SS24
6733	9322 128 70685	SMSS14
6734	4822 130 11416	PDZ6.8B
6735	5322 130 34337	BAV99
6736	9340 548 71115	PDZ33B
6740	4822 130 10837	UDZS8.2B
6G01	4822 130 11564	UDZ3.9B
6G02	4822 130 11564	UDZ3.9B
6G03	4822 130 11564	UDZ3.9B
6G04	4822 130 11564	UDZ3.9B
6G06	4822 130 11564	UDZ3.9B
6G07	4822 130 11564	UDZ3.9B
6G08	4822 130 11564	UDZ3.9B
6G09	4822 130 11564	UDZ3.9B

7151	3198 010 42310	BC847BW
7201	9340 550 49115	PUMH7
7202	9340 550 49115	PUMH7
7206	4822 130 60373	BC856B
7207	9322 214 45668	M24C16-WMN6P
7214	9339 693 90135	BCP69-25
7215	9339 693 90135	BCP69-25
7216	9340 425 20115	BC847BS
7217		SW (see 0801)
7219	3198 010 71090	74HC4053D
7220	9965 000 04199	BSN20
7221	9965 000 04199	BSN20
7430	4822 130 11155	PDTC114ET
7436	3198 010 70740	74LCX14T
7501	9322 199 16668	M74HC590T
7502	9322 208 98668	M68AF031AM70N6
7503	9322 199 16668	M74HC590T
7504	3198 010 42310	BC847BW
7505	9351 870 00118	74HC573PW
7506	9351 870 00118	74HC573PW
7601	9322 183 05668	TS482ID
7602	9351 742 70118	74HC08PW
7604	3198 010 42310	BC847BW
7605	9340 310 50215	PDTA143ET
7606	9340 425 20115	BC847BS
7708	9322 139 16668	LF33CPT
7710	9322 182 77668	L6910
7711	9322 160 70668	SI4936ADY
7730	9322 202 34668	L5973D
7735	4822 130 11057	2N7002
7738	9322 163 24668	L78M08CDT
7741	3198 010 42310	BC847BW
7742	3198 010 42310	BC847BW
7801	9322 230 32671	GM1501-LF-CF
7900	9322 142 88668	LF25CDT
7901	9322 189 19668	LD1086D2T18
7A02	3198 010 42310	BC847BW
7A03	3198 010 42310	BC847BW
7B01	9322 214 42671	K4D263238F-QC50
7C01	9322 189 01668	AT24C32AN
7C02	9322 215 39685	PST596JN
7C03		SW (see 0811)
7D00		SW (see 0821)
7D01		SW (see 0822)
7D02	9322 189 19668	LD1086D2T18
7D03	9352 810 72557	TDA9974AEL/8/C107
7D04	9352 668 39118	UDA1334ATS/N2
7D05	2722 171 00038	Xtal 13M5 15pF
7E00	9322 195 23668	ADG733BRU
7E01	9322 199 80668	SM5301BS-G
7E04	3198 010 70740	74LCX14T
7E05	3198 010 70740	74LCX14T
7F01	3198 010 42310	BC847BW
7F02	3198 010 42310	BC847BW
7F03	4822 209 15765	74HC4052D
7F04	3198 010 42310	BC847BW
7F05	3198 010 42310	BC847BW
7G01	3198 010 42310	BC847BW
7G02	3198 010 42310	BC847BW
7G11	3198 010 71090	74HC4053D
7L01	9322 226 40671	P3563M-LF-80
7L02	4822 209 17398	LD1117DT33
7L51	3198 010 42310	BC847BW
7L52	3198 010 42320	BC857BW
7L61	3198 010 42310	BC847BW
7L62	3198 010 42320	BC857BW
7L71	3198 010 42310	BC847BW
7L72	9322 226 94668	SM5304AV-G
7M00	9322 204 76671	T6TU5XBG-0001
7M01	9322 206 19672	MSM56V16160F-7T3-FG
7M03	9322 170 14668	LF15ABDT
7N00	9322 230 92671	PACIFIC3-N3(O2)
7N02	9322 206 45668	M25P05-AVMN6P
7N03	9322 187 04668	LF25ABDT
7N04	9322 170 14668	LF15ABDT
7N05	3198 010 42310	BC847BW

Audio Amplifier Panel [C]

Various

1M01	2422 025 18744	Connector 9p m
1M02	2422 025 18742	Connector 7p m
1M03	2422 025 18738	Connector 3p m
1M04	2422 025 19515	Connector 3p m

2D02	2020 552 96637	10µF 10% 6.3V 0805
2D03	2238 869 15101	100pF 5% 50V 0402
2D04	2020 552 96628	10nF 10% 16V 0402
2D11	2250 200 13667	2.2µF 10% 6.3V 0805
2D14	2222 580 15649	100nF 10% 50V 0805
2D17	2222 580 15649	100nF 10% 50V 0805
2D19	2222 580 15649	100nF 10% 50V 0805
2D20	2222 580 15649	100nF 10% 50V 0805
2D21	2222 580 15649	100nF 10% 50V 0805
2D22	2020 021 00215	220µF 20% 25V
2D23	2020 021 00215	220µF 20% 25V
2D26	2022 552 05679	1µF 10% 16V 0805
2D27	2022 552 05679	1µF 10% 16V 0805
2D28	2020 021 00215	220µF 20% 25V
2D30	2020 552 96628	10nF 10% 16V 0402
2D31	2020 552 96628	10nF 10% 16V 0402
2D32	2020 552 96621	1.5nF 10% 50V 0402
2D35	2020 552 96621	1.5nF 10% 50V 0402
2D36	2020 552 96621	1.5nF 10% 50V 0402
2D37	2020 552 96621	1.5nF 10% 50V 0402
2D38	2222 580 15649	100nF 10% 50V 0805
2D39	2020 552 96621	1.5nF 10% 50V 0402
2D40	2020 552 96621	1.5nF 10% 50V 0402
2D41	2222 580 15649	100nF 10% 50V 0805
2D43	2222 580 15649	100nF 10% 50V 0805
2D45	4822 126 14585	100nF 10% 0805 50V
2D46	4822 126 14585	100nF 10% 0805 50V
2D47	2020 552 96621	1.5nF 10% 50V 0402
2D48	2020 552 96621	1.5nF 10% 50V 0402
2D49	2020 552 96621	1.5nF 10% 50V 0402
2D50	2020 552 96621	1.5nF 10% 50V 0402
2D51	2020 552 96618	1nF 10% 50V 0402
2D52	2020 021 00215	220µF 20% 25V
2D53	2020 552 96828	470nF 20% 25V
2D54	2020 552 96828	470nF 20% 25V
2D55	2020 552 96621	1.5nF 10% 50V 0402
2D63	2020 552 96628	10nF 10% 16V 0402
2D64	3198 034 02280	2.2pF 1% 50V 0402
2D65	3198 034 02280	2.2pF 1% 50V 0402
2D66	3198 034 02280	2.2pF 1% 50V 0402
2D67	2238 586 59812	100nF 20% 50V 0603
2D68	2238 586 59812	100nF 20% 50V 0603
2D71	3198 034 01080	1pF 1% 50V 0402
2D72	3198 034 01080	1pF 1% 50V 0402
2D73	2020 552 96628	10nF 10% 16V 0402
2M10	2020 552 96618	1nF 10% 50V 0402
2M11	2020 552 96618	1nF 10% 50V 0402
2M12	2020 552 96618	1nF 10% 50V 0402
2M13	2020 552 96618	1nF 10% 50V 0402
2M14	2020 552 96618	1nF 10% 50V 0402
2M15	2020 552 96623	2.2nF 10% 50V 0402
2M16	2020 552 96623	2.2nF 10% 50V 0402
2M17	2020 552 96623	2.2nF 10% 50V 0402
2M18	2020 552 96623	2.2nF 10% 50V 0402
2M19	2020 552 96618	1nF 10% 50V 0402

3D01	3198 031 02240	220kΩ 5% 0.1W 0402
3D10	3198 031 04730	47Ω 5% 0402
3D11	4822 117 13601	22kΩ 5% 0402
3D12	4822 117 13601	22kΩ 5% 0402
3D13	3198 031 02720	2.7kΩ 5% 0.01W 0402
3D14	3198 031 02240	220kΩ 5% 0.1W 0402
3D16	4822 117 13602	2.2kΩ 5% 0.01W 0402
3D17	3198 031 02240	220kΩ 5% 0.1W 0402
3D18	3198 031 04730	47Ω 5% 0402
3D20	4822 117 13601	22kΩ 5% 0402
3D21	3198 031 02720	2.7kΩ 5% 0.01W 0402
3D22	4822 117 13606	10kΩ 5% 0.01W 0402
3D23	4822 117 13602	2.2kΩ 5% 0.01W 0402
3D24	4822 117 13606	10kΩ 5% 0.01W 0402
3D25	4822 117 13548	1kΩ 5% 0402
3D26	4822 117 13602	2.2kΩ 5% 0.01W 0402
3D34	2322 762 60332	3.3kΩ 5% 2512
3D35	4822 117 13548	1kΩ 5% 0402
3D37	2322 762 60332	3.3kΩ 5% 2512
3D38	4822 117 13548	1kΩ 5% 0402
3D39	2350 033 11223	22kΩ 5%
3D40	2350 033 11223	22kΩ 5%
3D42	3198 031 04730	47Ω 5% 0402
3D43	5322 117 11726	10Ω 5%
3D44	2322 762 60331	330Ω 5% 2512
3D45	2322 762 60331	330Ω 5% 2512
3D46	3198 031 04780	4.7Ω 5% 0402
3D47	3198 031 04780	4.7Ω 5% 0402
3D49	3198 031 01530	15kΩ 5% 0.01W 0402
3D50	3198 031 06820	6.8kΩ 5% 0.01W 0402

3D51	3198 031 06820	6.8kΩ 5% 0.01W 0402
3D54	3198 031 04730	47Ω 5% 0402
3D56	3198 031 01530	15kΩ 5% 0.01W 0402
3D57	3198 031 01530	15kΩ 5% 0.01W 0402
3D58	3198 031 06810	680Ω 5% 0.01W 0402
3D64	4822 117 13548	1kΩ 5% 0402
3D65	4822 117 13548	1kΩ 5% 0402
3D67	3198 031 03920	3.9kΩ 5% 0402
3D68	4822 117 11297	100kΩ 5% 0.1W
3D69	3198 031 03920	3.9kΩ 5% 0402
3D70	4822 117 11297	100kΩ 5% 0.1W
3D71	4822 117 13606	10kΩ 5% 0.01W 0402
3D72	4822 117 13606	10kΩ 5% 0.01W 0402
3D73	3198 031 05610	560Ω 5% 0.01W 0402
3D74	3198 031 05610	560Ω 5% 0.01W 0402
3D75	3198 031 04730	47Ω 5% 0402
3D76	4822 117 13601	22kΩ 5% 0402
3D78	4822 117 13601	22kΩ 5% 0402
3D79	4822 117 13601	22kΩ 5% 0402
3D81	3198 031 06810	680Ω 5% 0.01W 0402
3D82	3198 031 04730	47Ω 5% 0402
3D83	3198 031 04730	47Ω 5% 0402
3D84	3198 031 04730	47Ω 5% 0402
3D85	3198 031 04730	47Ω 5% 0402
3D86	4822 117 11297	100kΩ 5% 0.1W
3D87	3198 031 04730	47Ω 5% 0402
3D88	4822 117 13603	33kΩ 5% 0402
3D89	4822 117 13601	22kΩ 5% 0402
3D91	4822 117 13603	33kΩ 5% 0402
3M04	4822 117 13545	100Ω 1% 0402
9D03	2350 033 91001	4 x Jumper
9D04	2350 033 91001	4 x Jumper

5D10	2422 549 44197	Bead 220Ω at 100MHz
5D11	2422 549 44197	Bead 220Ω at 100MHz
5D12	2422 536 00137	33µH 10%
5D13	2422 536 00137	33µH 10%
5D14	2422 549 44197	Bead 220Ω at 100MHz
5D15	2422 549 44197	Bead 220Ω at 100MHz
5D16	2422 549 44197	Bead 220Ω at 100MHz
5M02	2422 549 44197	Bead 220Ω at 100MHz
5M03	2422 549 44197	Bead 220Ω at 100MHz
5M09	2422 549 44197	Bead 220Ω at 100MHz
5M10	2422 549 44197	Bead 220Ω at 100MHz
5M11	2422 549 44197	Bead 220Ω at 100MHz
5M12	2422 549 44197	Bead 220Ω at 100MHz

6D10	4822 130 11397	BAS316
6D11	9340 548 69115	PDZ27B
6D12	4822 130 11397	BAS316

7D10	9322 213 35668	LM339P
7D11	9340 425 20115	BC847BS
7D12	9340 425 20115	BC847BS
7D14	3198 010 42310	BC847BW
7D15	3198 010 44350	BC807-25W
7D16	9340 425 30115	BC847BPN
7D17	9340 219 30115	BC817-25W
7D18	9322 224 40668	FET FDS4559_NL
7D19	3198 010 42310	BC847BW
7D20	3198 010 44350	BC807-25W
7D21	9340 425 30115	BC847BPN
7D22	9340 219 30115	BC817-25W
7D23	9322 224 40668	FET FDS4559_NL
7D24	9340 219 30115	BC817-25W
7D25	9340 425 30115	BC847BPN
7D26	9340 425 30115	BC847BPN

Side I/O Panel [D]

Various

1001	2422 026 05133	Connector SVHS 4p f
1002	2422 026 05807	Socket Cinch 3p f YeWhRd
1010	4822 267 31014	Soc. headphone
1M36	2422 025 10655	Connector 11p m

2003	2022 552 05679	1µF 10% 16V 0805
2005	2020 552 94427	100pF 5% 50V
2007	2020 552 94427	100pF 5% 50V
2008	2238 916 15641	22nF 10% 25V 0603
2009	5322 126 11583	10nF 10% 50V 0603
2010	2238 916 15641	22nF 10% 25V 0603
2011	5322 126 11583	10nF 10% 50V 0603

3000	4822 051 30759	75Ω 5% 0.062W
3004	4822 051 30759	75Ω 5% 0.062W
3008	4822 051 30222	2.2kΩ 5% 0.062W
3009	4822 051 30102	1kΩ 5% 0.062W
3010	4822 051 30333	33kΩ 5% 0.062W
3011	4822 051 30392	3.9Ω 5% 0.063W 0603
3012	4822 051 30102	1kΩ 5% 0.062W
3013	4822 051 30333	33kΩ 5% 0.062W
3016	4822 051 30103	10kΩ 5% 0.062W
3020	4822 051 30103	10kΩ 5% 0.062W

6000	4822 130 11416	PDZ6.8B
6001	4822 130 11416	PDZ6.8B
6002	4822 130 11416	PDZ6.8B
6003	4822 130 11416	PDZ6.8B
6004	4822 130 11416	PDZ6.8B
6005	4822 130 11416	PDZ6.8B
6006	4822 130 11416	PDZ6.8B
6007	4822 130 11416	PDZ6.8B
6008	4822 130 11416	PDZ6.8B
6009	4822 130 11416	PDZ6.8B
6010	4822 130 11416	PDZ6.8B
6011	4822 130 11416	PDZ6.8B

Keyboard Control Board [E]

Various

1016	3104 328 28881	Side I/O assy
1701	4822 276 13775	Switch 1p 0.1A 12V
1702	4822 276 13775	Switch 1p 0.1A 12V
1703	4822 276 13775	Switch 1p 0.1A 12V
1704	4822 276 13775	Switch 1p 0.1A 12V
1705	4822 276 13775	Switch 1p 0.1A 12V
1706	4822 276 13775	Switch 1p 0.1A 12V
1M01	4822 267 10459	Connector 3p

3002	4822 051 30151	150Ω 5% 0.062W
3003	4822 051 30391	390Ω 5% 0.062W
3004	4822 051 30561	560Ω 5% 0.062W
3005	4822 117 12968	820Ω 5% 0.62W
3006	3198 021 31820	1.8kΩ 5% 0.062W 0603
3999	4822 117 11454	820Ω 1% 0.1W

Front IR Panel [J]

Various

0345	2422 025 18741	Connector 6p m
1040	9322 206 81667	TSOP34836YA1

2040	4822 124 12095	100µF 20% 16V
2801	2020 552 96637	10µF 10% 6.3V 0805
2802	2020 552 96637	10µF 10% 6.3V 0805

3040	4822 117 13597	330Ω 5% 0.01W 0402
3051	4822 051 30221	220Ω 5% 0.062W
3061	4822 051 30221	220Ω 5% 0.062W
3063	4822 117 13606	10kΩ 5% 0.01W 0402
3078	3198 031 02250	2.2MΩ 5% 0.1W 0402
3801	4822 051 30332	3.3Ω 5% 0.062W
3802	4822 051 30331	330Ω 5% 0.062W
3803	4822 051 30221	220Ω 5% 0.062W
9012	4822 117 13605	Jumper 0402
9041	4822 117 13605	Jumper 0402
9042	4822 117 13605	Jumper 0402
9062	4822 117 13605	Jumper 0402
9066	4822 117 13606	10kΩ 5% 0.01W 0402
9070	4822 117 13605	Jumper 0402
9081	4822 117 13605	Jumper 0402
9082	4822 117 13605	Jumper 0402
9111	4822 117 13605	Jumper 0402
9112	4822 117 13605	Jumper 0402
9115	4822 117 13605	Jumper 0402
9122	4822 117 13605	Jumper 0402

6051	9322 218 97685	SML-310VTK
6060	9322 134 46685	SML-310MT
6070	9322 140 63685	TEMD5000
6801	9322 192 35676	SPR-325MVW
6803	4822 130 11564	UDZ3.9B

7051	3198 010 42310	BC847BW
7052	3198 010 42310	BC847BW
7062	4822 130 60373	BC856B
7801	4822 130 60373	BC856B
7802	9322 207 16667	TSOP34836LL1B
7803	5322 130 60159	BC846B
7804	5322 130 60159	BC846B

OTC Flash Panel [T]

Various

1000	2422 025 19459	Connector 14p m
1001	2422 543 01497	Xtal 6Mhz 20pF

2001	4822 126 14324	33pF 5% 50V 0402
2002	3198 034 02790	47pF 1% 50V 0402
2003	2020 552 96718	220nF 10% 6.3V 0402
2004	2020 552 96718	220nF 10% 6.3V 0402
2007	3198 035 71040	100nF 10% 16V 0402
2008	3198 035 71040	100nF 10% 16V 0402
2010	3198 034 04790	27pF 1% 50V 0402
2011	3198 034 04790	27pF 1% 50V 0402
2012	3198 034 04790	27pF 1% 50V 0402
2019	3198 035 71040	100nF 10% 16V 0402
2020	3198 035 71040	100nF 10% 16V 0402
2021	3198 035 71040	100nF 10% 16V 0402
2022	3198 035 71040	100nF 10% 16V 0402
2023	3198 035 71040	100nF 10% 16V 0402
2024	3198 035 71040	100nF 10% 16V 0402
2025	3198 035 71040	100nF 10% 16V 0402
2026	3198 035 71040	100nF 10% 16V 0402
2027	3198 035 71040	100nF 10% 16V 0402
2028	3198 035 71040	100nF 10% 16V 0402
2029	4822 124 12095	100µF 20% 16V
2031	3198 035 71040	100nF 10% 16V 0402
2033	2238 869 15829	82pF 5% 50V 0402
2034	2238 869 15829	82pF 5% 50V 0402
2035	2238 869 15829	82pF 5% 50V 0402
2036	2238 869 15829	82pF 5% 50V 0402
2037	2238 869 15829	82pF 5% 50V 0402
2038	3198 035 71040	100nF 10% 16V 0402

3002	4822 117 13545	100Ω 1% 0402
3003	4822 117 13525	24kΩ 1% 0.62W 0603
3005	4822 117 13545	100Ω 1% 0402
3006	4822 117 13606	10kΩ 5% 0.01W 0402
3007	3198 031 14710	4 x 470Ω 5% 1206
3008	4822 117 13523	220Ω 5% 0.63W
3010	4822 117 13543	470Ω 5% 0402
3011	4822 117 13545	100Ω 1% 0402
3012	3198 031 11010	4 x 100Ω 5% 1206
3013	3198 031 04720	4.7kΩ 5% 0402
3014	3198 031 04720	4.7kΩ 5% 0402
3015	4822 117 13545	100Ω 1% 0402
3016	4822 117 13545	100Ω 1% 0402
3021	4822 117 13605	Jumper 0402
3023	4822 117 13606	10kΩ 5% 0.01W 0402
3029	4822 117 13606	10kΩ 5% 0.01W 0402
3031	4822 117 13606	10kΩ 5% 0.01W 0402
3034	3198 031 11010	4 x 100Ω 5% 1206
3035	3198 031 11010	4 x 100Ω 5% 1206
3048	3198 031 11010	4 x 100Ω 5% 1206
3049	3198 031 11010	4 x 100Ω 5% 1206
3050	3198 031 11010	4 x 100Ω 5% 1206
3051	3198 031 11010	4 x 100Ω 5% 1206
3052	3198 031 11010	4 x 100Ω 5% 1206
3053	4822 117 13545	100Ω 1% 0402
3054	3198 031 11010	4 x 100Ω 5% 1206
3055	3198 031 11010	4 x 100Ω 5% 1206
3056	3198 031 11010	4 x 100Ω 5% 1206
3057	3198 031 11010	4 x 100Ω 5% 1206
3062	4822 117 13606	10kΩ 5% 0.01W 0402
4002	4822 117 13605	Jumper 0402

4004	4822 117 13605	Jumper 0402

5001	2422 549 45333	Bead 120Ω at 100MHz

7001	9352 684 81557	SAA5801H/015
7002	9322 189 01668	AT24C32AN
7003	3198 010 70400	74LVC1G14GW
7006	9322 194 74671	M29W160ET70N6E
7007	9322 200 55668	IS41LV16100-50K

11. Revision List

Manual xxxx xxx xxxx.0

- First release.

Manual xxxx xxx xxxx.1

- **Chapter 7:** PDP FHP Supply diagrams and layouts added.
- **Chapter 8:** Panel size table modified.
- **Chapter 10:** PDP FHP Supply panel added.